Training in

Injection Molding

2nd Edition

HANSER

Michaeli / Greif / Kretzschmar / Ehrig

Training in Injection Molding

Michaeli / Greif / Kretzschmar / Ehrig

Training in Injection Molding

A Text- and Workbook

2nd Edition

HANSER

Hanser Publishers, Munich

Hanser Gardner Publications, Inc., Cincinnati

The Authors:
Professor Dr.-Ing. Walter Michaeli, IKV Ponststraße 49, 52062 Aachen, Germany; *Dr. phil. Helmut Greif*, Hans-Heyden-Straße 199, 52134 Herzogenrath, Germany; *Dr.-Ing. Gernot Kretzschmar*, Alsenstraße 17, 41748 Viersen, Germany; *Dr.-Ing. Frank Ehrig*, Feldeggstraße 4, CH-8645 Jona, Switzerland

Distributed in the USA and in Canada by
Hanser Gardner Publications, Inc.
6915 Valley Avenue, Cincinnati, Ohio 45244-3029, USA
Fax: (513) 527-8950
Phone: (513) 527-8977 or 1-800-950-8977
Internet: http://www.hansergardner.com

Distributed in all other countries by
Carl Hanser Verlag
Postfach 86 04 20, 81631 München, Germany
Fax: +49 (89) 98 12 64

The use of general descriptive names, trademarks, etc., in this publication, even if the former are not especially identified, is not to be taken as a sign that such names, as understood by the Trade Marks and Merchandise Marks Act, may accordingly be used freely by anyone.

While the advice and information in this book are believed to be true and accurate at the date of going to press, neither the authors nor the editors nor the publisher can accept any legal responsibility for any errors or omissions that may be made. The publisher makes no warranty, express or implied, with respect to the material contained herein.

Library of Congress Cataloging-in-Publication Data
Technologie des Spritzgiessens. English
Training in injection molding : a text and workbook / Michaeli . . . [et al.].–2nd ed.
p. cm.
ISBN 1-56990-302-6 (softcover)
1. Injection molding of plastics I. Michaeli, Walter. II. Title.
TP1150.T41713 2001
668.4'12–dc21 2001039029

Die Deutsche Bibliothek—CIP-Einheitsaufnahme
Training in injection molding : a text- and workbook / Michaeli . . . -2. ed..-Munich
: Hanser; Cincinnati : Hanser Gardner, 2001
Dt. Ausg. u.d.T.: Technologie des Spritzgießens
ISBN 3-446-21418-6

All rights reserved. No part of this book may be reproduced or transmitted in any form or by any means, electronic or mechanical, including photocopying or by any information storage and retrieval system, without permission in writing from the publisher.

© Carl Hanser Verlag, Munich 2001
Project Management in the UK by Martha Kürzl, Stafford
Typeset in the UK by Techset Composition Ltd., Salisbury
Printed and bound in Germany by Fa. Kösel, Kempten

Foreword

Training in Injection Molding is a text- and workbook for technicians employed in the plastics industry. The original German language edition, Technologie des Spritzgießens, was prepared at the request of three cooperating organizations: the Federal Republic of Germany, the German Federal Association of Employers in the Chemical Industry (BAV Chemie) and the German Chemical Workers Union (IG Chemie). The writing of the book was contracted by them to the Institute of Plastics Processing (Institut für Kunststoffverarbeitung—IKV) at the Technical University of Aachen.

The book is intended as a sequel to Training in Plastics Technology by Walter Michaeli, Leo Wolters, Helmut Greif and Franz-Josef Vossebürger also of the Institut für Kunststoffverarbeitung.

The text focuses on many very important practical aspects of injection molding not (usually) found in treatments of injection molding intended for American engineering students. This includes the design of machine clamping units and hydraulic systems as well as the interaction of the plasticating and mold sections of the machine. Engineering students as well as technicians will find many sections of this book worthy of serious study.

It is hoped that this book will find use in educational programs taught both within industry and in schools dedicated to this purpose.

James L. White
Institute of Polymer Engineering
The University of Akron
Akron, OH, USA

Publisher's Note: Professor White edited the manuscript for the first edition of this book and adapted it for training courses of plastics technicians in the United States and in other countries where English is spoken. His effort is gratefully acknowledged.

Preface

Injection molding is the most important method in the field of plastics processing in terms of the number of machines operating, the value of the products and the number of individuals involved. This text- and workbook provides an introduction to this processing method.

Lessons

Training in Injection Molding is divided into educational units which can be described as lessons. Each lesson covers a distinct subject area. The individual lessons are arranged in such a way that they can be tackled by the student in a meaningful educational sequence, namely in a step-by-step manner.

Key Questions

The *key questions* at the beginning of each lesson are intended to help the student approach the subject matter with certain questions in mind. The student should be able to answer these questions after working through the lesson.

Prerequisite Knowledge

It is not necessary to study the lessons in any particular sequence. Each lesson is therefore preceded by a list of other lessons or sections which are important for understanding the new material.

Review Questions

The review questions at the end of each chapter test the knowledge acquired. The student selects an answer from among the choices provided and enters it in the blank space within the sentence (_____). The answers can be checked against the lists of correct answers at the end of the book. If the chosen answer is incorrect, the student should review the corresponding subject matter.

An Example: The Compact Disk (CD)

In order to give the explanations in this book a more concrete form and to clarify the relationship between lessons, we have chosen a familiar molding, the Compact Disk, to serve as an example. On the one hand, the production of this plastics molding puts special demands on the technology employed. But on the other hand, the widespread distribution of the CD would not be possible without this special production technology. The CD thus represents a typical high-quality plastics product. It recurs in many of the lessons, providing answers to various questions regarding the choice of the right plastics material for a particular molding or the possibilities of recycling, for example.

Appendices

The appendices provide the interested reader with supplementary material regarding plastics. The reader can derive information on additional technical literature from the list of selected literature. The glossary is intended to contribute to a consistent understanding of the terms used in the book. It can be used as a brief lexicon.

Acknowledgments

This book has been a collaborative effort. We would especially like to thank Werner Okon for the preparation of the figures. Special thanks also to the translators Randall T. Wert and Elmar Tremmel who did a perfect job.

The authors hope you will enjoy learning and working with this book.

Walter Michaeli
Helmut Greif
Gernot Kretzschmar
Frank Ehrig

Contents

Introduction	Injection Molding – An Ideal Manufacturing Method	1
Lesson 1	Basic Principles of Plastics	5
	1.1 Classification and Identification of Polymeric Materials (Plastics and Elastomers)	6
	1.2 Deformation Characteristics of Plastics	8
	1.3 Molding Compounds and Shaping Methods	11
	1.4 Plastics Melts	12
	Review Questions	18
Lesson 2	The Injection Molding Machine	19
	2.1 Classification of Injection Molding Machines	20
	2.2 Structural Units of Injection Molding Machines	24
	2.3 Special Injection Molding Processes	26
	Review Questions	30
Lesson 3	The Plasticating and Injection Unit	31
	3.1 Tasks of the Plasticating and Injection Unit	32
	3.2 Plasticating	35
	3.3 Injection	37
	Review Questions	40
Lesson 4	The Mold	41
	4.1 Tasks and Modes of Operation	42
	4.2 Gating and Runner System	43
	4.3 Cavity	47
	4.4 Heating/Cooling Systems	49
	4.5 Ejection System	50
	Review Questions	54
Lesson 5	The Clamping Unit	55
	5.1 Function and Structure	56
	5.2 Mechanical Clamping Units	57
	5.3 Hydraulic Clamping Units	59
	Review Questions	62

Lesson 6	Drive System and Controls	63
	6.1 Drive System	64
	6.2 Controls	67
	Review Questions	68
Lesson 7	The Injection Molding Process	69
	7.1 Phases of an Injection Molding Cycle	70
	7.2 Start	72
	7.3 Injection Phase	74
	7.4 Holding Pressure Phase	77
	7.5 Cooling Phase	80
	7.6 Feed Phase	82
	7.7 Removal from the Mold	83
	Review Questions	86
Lesson 8	Mold Design	87
	8.1 Tasks and Specifications of Injection Molding Tools	88
	8.2 The Designer's Tasks	88
	8.3 Mold Layout	90
	Review Questions	98
Lesson 9	Quality Assurance in Injection Molding	99
	9.1 Quality	100
	9.2 Quality Assurance	101
	9.3 Quality Management	102
	9.4 Integrated Management Systems	108
	Review Questions	110
Lesson 10	Recycling of Plastics Waste	111
	10.1 Reutilization of Plastics	112
	10.2 Recycling of Production Waste	115
	10.3 Recycling of Industrial and Domestic Plastics Waste	116
	Review Questions	118
Appendix I	The Modern Injection Molding Company	119
	I.1 Structure of an Injection Molding Company	120
	I.2 Order Processing Organization within an Injection Molding Company	121
	I.3 Specifications for Injection Molding Companies	122
Appendix II	Occupational Safety Around Injection Molding Machines	125
	II.1 European Regulations	126
	II.2 U.S. Regulations	130
Appendix III	Selected Literature	135
Appendix IV	Glossary of Injection Molding Technology	139
Answers to Review Questions		149

Introduction

Injection Molding – An Ideal Manufacturing Method

Key Questions

What is injection molding?
What is injection molding used for?
What are the main characteristics of an injection molding machine?

Contents

Injection Molding – A Young Production Method
Injection Molding – A Discontinuous Single-Stage Process
Injection Molding – The Injection Molding Machine and Mold

Injection Molding – A Young Production Method

the most important processing method for plastics

In comparison to the classic methods of metal fabrication and processing (such as milling, drilling, turning, etc.), injection molding represents a manufacturing method which is still young. However, injection molding has already become the most important method in plastics processing technology.

plunger machines

The early injection molding machines were plunger machines. The plastic was melted in a heated cylinder and injected into the mold by the plunger. This type of machine is no longer found, except in research laboratories, for making very small quantities of experimental articles. Plunger machines are not discussed in this book.

screw principle

Most modern injection molding machines operate on the screw principle. The molding compound is melted by band heaters and the frictional heat produced by the rotating screw. In the injection operation, the rotation of the screw is stopped and the screw begins to function as a plunger. The screw must therefore fulfill the functions of conveyance, mixing, and injection. Separate plasticating screws and injection plungers are often used in the processing of elastomers.

thermoplastics

Thermoplastics represent the most important group of plastics to be processed in injection molding. Typical injection-molded parts made from thermoplastics include automobile hubcaps and bumpers, gears in kitchen appliances, screw-on caps and lids, bottle crates, printer cartridges, and ball-point pens. Even the Compact Disk (CD) is produced from polycarbonate (PC) by the injection molding method.

Compact Disk (CD)

elastomers

Another important materials group are the cross-linked polymers, such as elastomers and thermosets. Typical elastomer molded parts manufactured by injection molding include bellows, shock-absorbing components in automobiles, seals, and molded tubes.

thermosets

Thermosets consist of densely crosslinked polymers, that can also be processed by injection molding. Thus produced articles are used in boats, in the automotive field and in the electrical industry (insulation). Thermoset moldings find particular application, where their non-conductive properties and heat-resistance are essential. Injection molding provides a cost-effective mass-production process of articles for the electrical industry.

Injection Molding – A Discontinuous Single-Stage Process

primary processing method

Injection molding, as a primary processing method, is particularly well suited for the mass-production of molded articles, because the conversion of the raw material into a finished product usually requires just a single operation. Little or no finishing is required, and even complicated geometries can be produced in a single operation.

ideal production process

It is an ideal production process with the proviso, that large batches are produced, because the injection molding tool is usually made for a single article only.

expensive molds

It is typical within the context of primary processing technology, that each mold is unique. Molds are therefore very expensive in comparison to most forming tools and dies used in metals fabrication, because they are not universally employable.

production process

The process for molding thermoplastics proceeds as follows:

- The material is fed into the hopper on the machine.
- Within the heated cylinder, the material is conveyed, melted, and mixed thoroughly by the rotating screw.
- The molten molding compound (melt) is then injected into the mold under high pressure.
- The melt cools within the heat-balanced mold and thus gains the inherent stability needed for its removal.
- The article is now removed from the mold, and a new injection molding cycle can begin.

high degree of accuracy

Parts produced by injection molding display a very high degree of dimensional accuracy – for example, to $1/100$ mm ($4 \cdot 10^{-4}$ in). Even greater accuracy is possible in special applications.

CD

With the Compact Disk, information is stored in minute pits formed in the surface. These pits, produced as direct reproductions by the injection molding process, are only a few microns wide and deep.

Injection Molding – The Injection Molding Machine and Mold

main components

Two main components are required for injection molding:

- The injection molding machine
- The mold

injection molding machine

The injection molding machine is in turn divided into the

- Plasticating (plastification) unit and the injection unit
- Clamping unit

- Controls (hydraulics, electrical system)

mold

Different molds are needed for different injection-molded articles. It is therefore necessary to replace the entire mold in order to produce a different part from the one currently being made.

profitable production

Production of certain articles (e.g., household appliances, certain automotive subassemblies, CDs) would not be profitable at all without the means, of producing them from plastics by injection molding.

special features

When articles hitherto produced from classic materials (such as wood or metal) are to be made by the injection molding process, it is advisable, to give serious consideration to the special properties of plastics materials, as well as the more salient points of injection molding as a production method. This plastics-oriented procedure requires an understanding of the basic principles of the manufacturing and production processes involved, and also of the plastics material's behaviour. The book provides a comprehensive overview of the principles involved in injection molding.

CD

For that purpose, we follow a modern plastics article (a Compact Disk) from the starting material to the form, in which it will ultimately be used. The possibilities for recycling will also be explained. As a high-tech product, the CD is particularly well suited to serve as an example of modern plastics processing and injection molding technology. The diagram shows a CD and its dimensions.

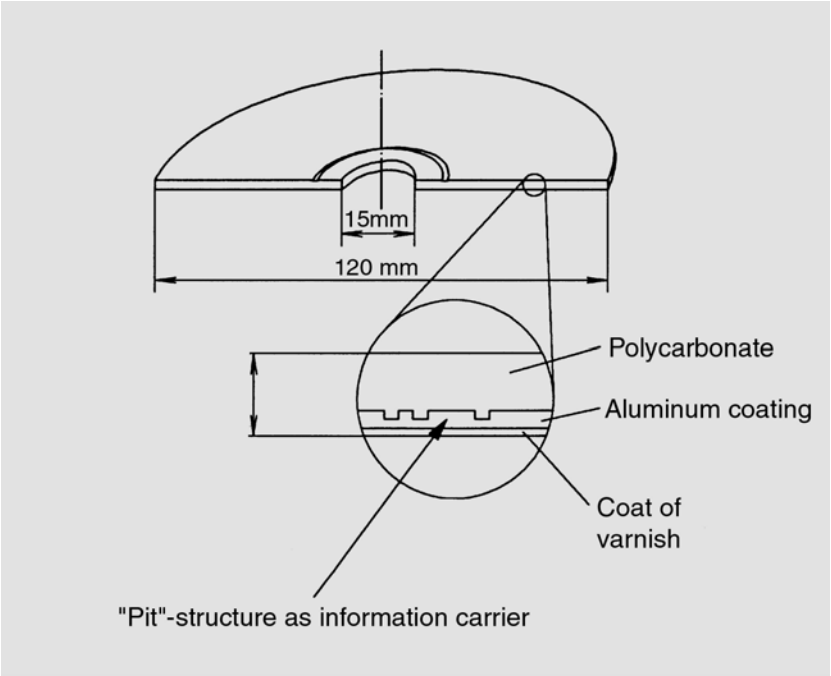

Lesson 1

Basic Principles of Plastics

Key Questions

What types of polymeric materials (plastics and elastomers) are there?
How do they behave under the influence of heat?
How does melt viscosity vary with temperature?
Which plastics are used in injection molding?

Contents

1.1 Classification and Identification of Polymeric Materials (Plastics and Elastomers)
1.2 Deformation Characteristics of Plastics
1.3 Molding Compounds and Shaping Methods
1.4 Plastics Melts

Review Questions

1.1 Classification and Identification of Polymeric Materials (Plastics and Elastomers)

polymers

Plastics and elastomers are the names given to synthetic organic polymers manufactured from organic compounds of low molecular weight, called monomers, (e.g. ethylene, styrene, vinyl chloride). The manufacture of plastics and elastomers can even be based on natural macromolecular substances (e.g., natural rubber, cellulose, proteins).

methods of synthesis

The methods of polymer synthesis consist of:

- Polymerization chain or addition polymerization
- Polyaddition (polyadduct formation) and
- Polycondensation (step polymerization).

Plastics possess different material characteristics, which exert their decisive influence during processing, such as injection molding.

groups

There are three distinguished overall groups of polymeric materials. Figure 1-1

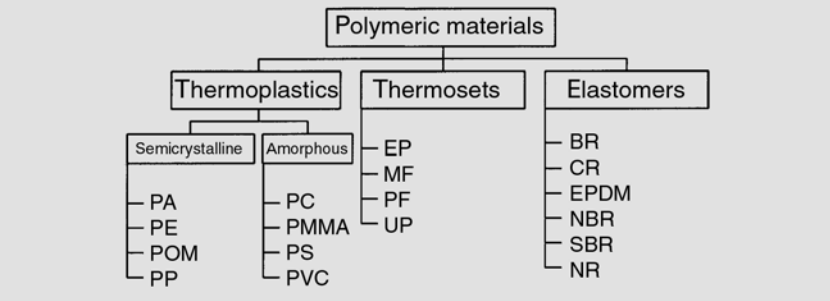

Figure 1-1 Classification of polymeric materials

names each of these groups and also quotes examples.

thermoplastics

Thermoplastics (*thermos* = warm; *plasso* = shape, shapable) are fusible. They can be fused repeatedly and are capable of dissolving or at least swelling in many solvents. At room temperature, they vary from a tough, soft condition to a ductile or rigid hardness. Quantitatively, thermoplastics have the largest share of the plastics market.

amorphous thermoplastics
semi-crystalline thermoplastics

Amorphous (*amorph* = formless) thermoplastics are similar to glass with respect to molecular structure. They are distinguished from semi-crystalline thermoplastics, which have a milky, opaque appearance. When a plastic is as transparent as glass, it is usually safe to assume that it is an amorphous thermoplastic.

CD cases

Various types of CD cases are available in different materials. The most popular one is the Jewel Box however, produced in an amorphous plastics compound. Most tops of CD cases are produced in that material, because of its transparency, so that the list of titles can be read through it. If a colored case is desired, it is also quite easy to pigment the transparent material. Even the CD itself is produced in glass-clear plastic and therefore transparent. However, it is coated (sputtered) with a reflective layer (usually of aluminum, but gold is also used) by a vacuum deposition process and then printed. The aluminum or gold coating acts like a mirror, so the laser beam does not pass through the CD but is reflected instead (Figure 1-2).

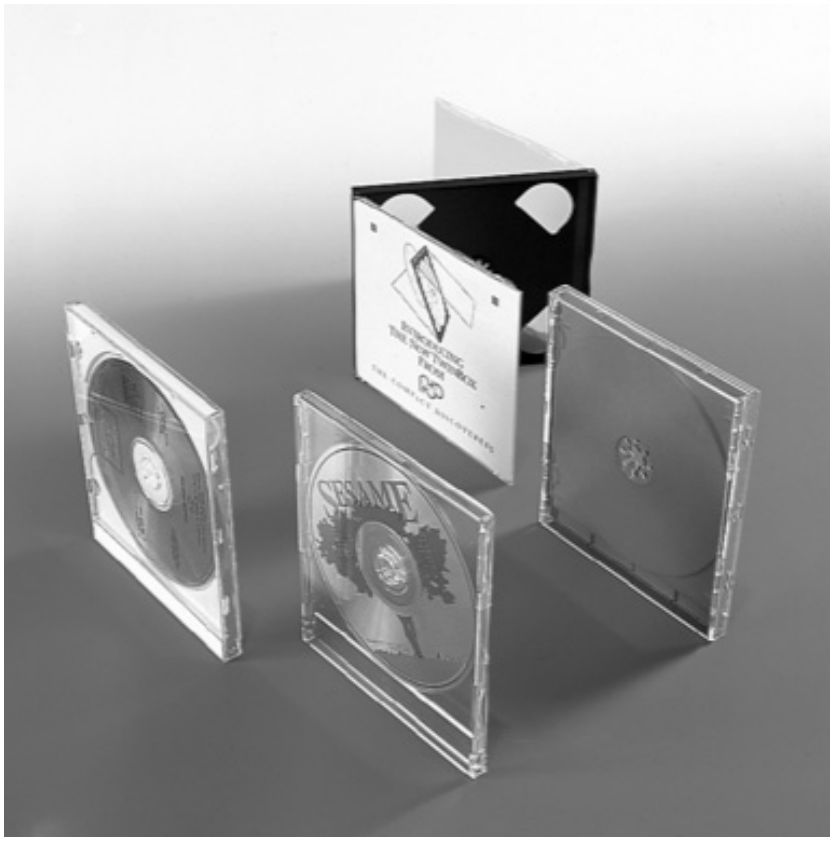

Figure 1-2 Compact Disk and case

elastomers

Elastomers (*elastic* = flexible; *meros* = part) cannot be fused or dissolved, but can be made to swell. They cross-link in a wide mesh pattern and therefore exist in a soft, elastic condition at room temperature. Examples of molded parts made from elastomers include seals, bellows, and tires. Natural rubber (NR) represents a special case within the group of elastomers. It is obtained from the sap (latex) of tropical trees.

thermosets

Thermosets are hard. They are cross-linked with a narrow mesh in all directions. They are impervious to plastic deformation, infusible, and highly temperature resistant. Because thermosets are densely cross-linked, they are impossible to dissolve and quite difficult to swell. They are hard and brittle at room temperature. Electrical socket-outlets are manufactured from thermosets, for example, because resistance to high and low temperatures is very important here. Thermoplastics are incapable of meeting these requirements.

ISO 1043

ISO 1043 provides for each plastic (polymer) to be identified by a sequence of symbols (an abbreviation) which indicates its chemical structure. Additional letters (codes) identify its use, fillers, and basic properties, such as density or viscosity. An example is given in Figure 1-3.

Identification of a plastics material (polymer)

PE-LLD (L L D P E)

Material designation:

Linear low-density polyethylene

Abbreviation for the basic polymer product:

PE = polyethylene

Code-letters for additional properties:

L = linear (1. code-letter for special properties)

L = low (2. code-letter for special properties)

D = density (3. code-letter for special properties)

Figure 1-3 Identification of a plastics material

In this instance, we merely wanted to introduce these properties. They are discussed in greater detail later in the lesson.

1.2 Deformation Characteristics of Plastics

thermoplastics: states/temperature ranges

Polymeric materials display different characteristics when heated. These characteristics depend on various factors, including the chemical structure of the polymer molecules and the type of intermolecular bonding forces.

plastic state

Injection molding is a primary processing method. In other words, the material must exist in a plastic state so that it can be processed. This plastic state is characterized by the viscous flow properties exhibited by raw plastic materials such as powders or granulates.

deformation characteristics

The characteristics displayed by polymeric materials when subjected to heat – known as *deformation characteristics* – are illustrated using an amorphous thermoplastic as an example (see Figure 1-4).

effects of temperature

The polymer is a hard material at room temperature. Because the individual macromolecules barely move, they are held together by intermolecular forces. An increase in temperature causes the macromolecules to move with greater intensity. The intermolecular bonds loosen and the strength of the material decreases, while its extensibility and ductility increase.

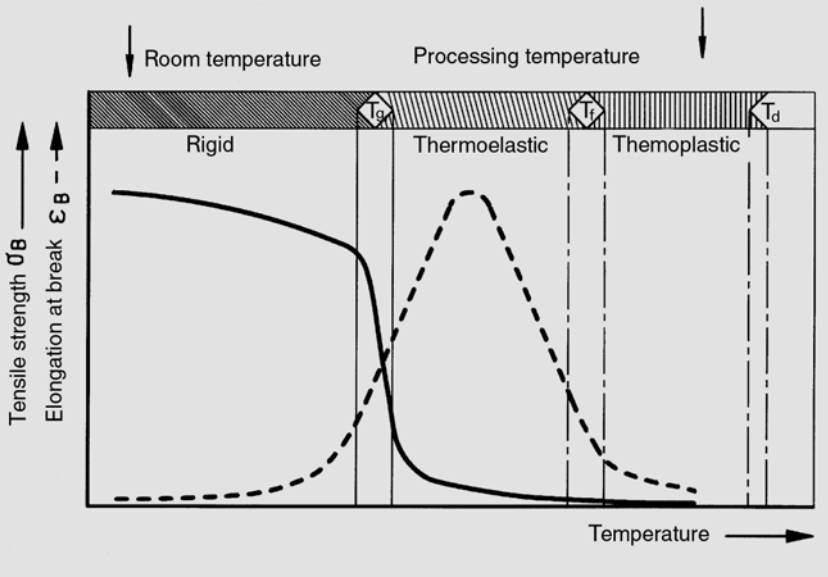

Figure 1-4 Deformation characteristics of amorphous thermoplastics
Legend:

T_g = glass transition temperature
T_f = flow temperature range
T_d = decomposition temperature

glass transition temperature T_g

Once the glass transition temperature (T_g) has been exceeded, the intermolecular forces have become so weak that the influence of external forces can cause the macromolecules to slip apart from one another. The strength declines steeply, while the elongation leaps upward. In this temperature range, the plastic exists in a rubber-elastic or thermoelastic state.

flow temperature range T_f

As the temperature continues to increase, the intermolecular forces are almost completely eliminated. The polymer proceeds in a continuous manner from the thermoelastic state to the thermoplastic or molten state. This transition is described as the range of the flow temperature (T_f). This temperature cannot be specified precisely. Primary processing methods such as injection molding are carried out within the thermoplastic range.

decomposition temperature T_d

If heating continues beyond the decomposition temperature (T_d), the polymer is destroyed.

The deformation characteristics of a semi-crystalline thermoplastic can be seen in Figure 1-5.

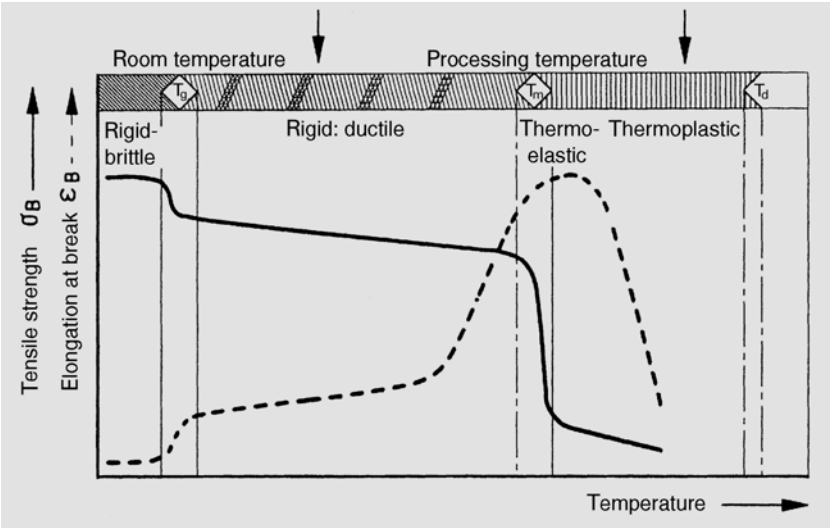

Figure 1-5 Deformation characteristics of semi-crystalline thermoplastics
Legend:

T_g = glass transition temperature
T_m = crystalline melting temperature
T_d = decomposition temperature

crystallite melting temperature

In contrast to amorphous thermoplastics, two side-by-side conditions virtually exist in crystalline thermoplastics. On the one hand, there is the crystalline zone, in which molecules are packed in tight, ordered formation. Then there is the other, amorphous zone, where molecules are spread further apart, in a disordered fashion. The intermolecular forces holding the crystalline zone together are considerably stronger than those in the amorphous one. The amorphous content of the polymer softens above its glass transition temperature (T_g). The crystalline zones of the polymer melts, when the crystalline melting temperature (T_m) is exceeded.

temperature behavior

Semi-crystalline thermoplastic possesses great strength and increasing elasticity between T_g and T_m. The softening temperatures of the amorphous zone of conventional partially crystalline thermoplastics lie far below room temperature. Within the range of practical application (i.e., at room temperature and above) most semicrystalline thermoplastics are both tough and strong. When the crystalline melting temperature (T_m) is exceeded, strength decreases sharply and elongation reaches its highest value (in the thermoelastic range). Once the high temperature has completely eliminated the cohesion within the crystalline zones, elongation decreases sharply and suddenly.

deformation characteristics

This difference in the deformation characteristics of amorphous and semicrystalline thermoplastics can be attributed to their different molecular structures. As already mentioned, the intermolecular forces operate with much greater strength in the crystalline than in the amorphous state.

1.3 Molding Compounds and Shaping Methods

shaping methods

The shaping methods employed in the machining and processing of plastics, can be divided according to the physical status (temperature ranges) of those materials. Figure 1-6 shows the assignment of shaping methods to thermoplastics compounds in relation to their status ranges.

Shaping technology	Status range		
	Solid	**Thermoelastic**	**Thermoplastic**
Molding			Injection molding Extruding Casting Calendering Compression molding
Forming		Folding/bending Stamping/knurling Stretch forming Thermoforming Combined processes	
Cutting	Drilling Turning Milling Planing Sawing Cutting Grinding		
Joining	Bolting/screwing Riveting Bonding		Welding

Figure 1-6 Shaping methods

injection molding

Injection molding is one of the primary processing methods. It is carried out in the thermoplastic state, i.e. above the flow temperature range (T_f) or crystalline melting temperature (T_m) and below the decomposition temperature (T_d).

molding compound

Molding compound (or, more specifically, *injection molding compound*) denotes the raw material, from which molded articles are produced. Molding compounds are supplied by manufacturers of injection molding materials as:

- Granulate (extruded molding compound, die-face cut into grain-sized granules)
- Powder or
- Grit

delivery

Molding compounds are supplied in metal drums (contents: 10 kg), paper- or plastic bags and in some cases by rail- or road transported bulk-carriers even.

moisture

Injection molding compounds must be stored in dry conditions, because their moisture content must not exceed the permissible limit of 0.1% to 0.3% (for thermoplastics). However, damp molding compounds, such as polycarbonate (PC), can be dried at temperatures of 120 to 130°C (250–270°F) for about 8 to 12 hours.

thermosets
elastomers

The situation is different with thermosets and elastomers. They are usually introduced to the machine in the form of strips (elastomers) or liquids (silicone rubber). Thermosets are supplied as powders or liquids. Thermosets reinforced by long glass fibers are sometimes loaded into the machine as "sauerkraut".

1.4 Plastics Melts

1.4.1 Viscosity

viscosity

flow-resistance

In the injection molding process, the polymer exists in a thermoplastic state. It flows in a viscous manner. The viscosity of a liquid is a measure of its flow resistance. For a Newtonian liquid, such as water, the viscosity is defined as [η], (shown in Figure 1-7).

Formula

$$\eta = \frac{\tau}{\dot{\gamma}}$$

Legend

η [Pa·s] = viscosity
τ [N/mm^2] = shear stress
γ [1/s] = shear rate

Figure 1-7 Viscosity

viscous liquid

To illustrate what viscosity means, we can imagine two containers of equal size. In the bottom of each container is a closed hole, each with the same diameter. If we fill one container with water and the other with a viscous lacquer, then open both holes at the same time, a given quantity of lacquer will require much more time to flow out of the container than will the same quantity of water. We can see that the lacquer is more viscous than water. If a liquid possesses an especially high viscosity, it is said to be highly viscous.

1.4.2 Shear Stress and Shear Rate

flow rate profile

When a liquid flows through a tube, the highest rate of flow occurs in the middle of the tube's cross section. As we move out toward the wall of the tube, we find that the flow rate decreases. At the wall of the tube, it finally reaches zero, because of the liquid's adhesion to the wall. The result is a profile of flow rates. We can therefore imagine a flowing liquid as a series of liquid layers flowing at different rates (see Figure 1-8).

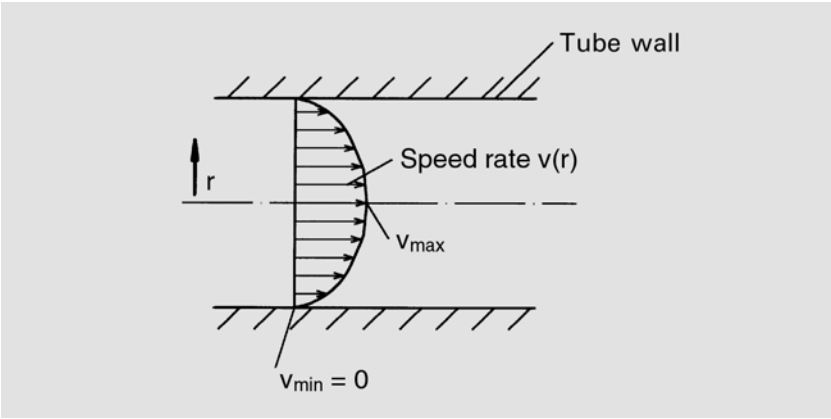

Figure 1-8 Speed rate profile of a liquid passing through a tube

shear stress
shear rate

Shear stress results as the flowing layers of macromolecules slip past one another. The shear rate is the difference in the rates of flow or the shear gradient – that is, the change in the rates of the flowing layers across the radius of the cross section. The viscosity decreases with increasing shear rate.

1.4.3 Viscosity and Temperature

viscosity

If a liquid is heated, its viscosity decreases. For example, if we heat the lacquer in our previous example, it requires less time to flow out of the container. The viscosity of a thermoplastics melt thus depends not only on the shear rate, but also on the temperature (see Figure 1-9).

temperature

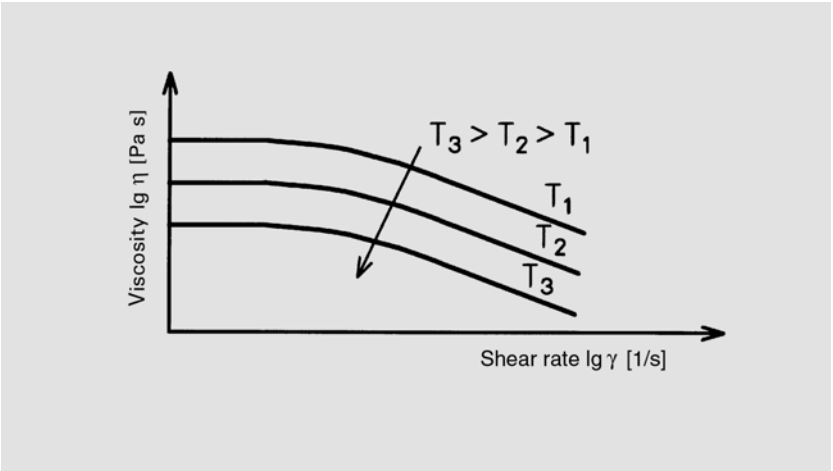

Figure 1-9 Viscosity function of a plastics material

Viscosity decreases as temperature increases, so the plastic melt begins to flow in a less viscous manner. In the case of polyethylene, for example, the viscosity measures approximately 138 Pa·s at a shear rate of 1000 $1/s$ and a temperature of 150°C (300°F). However, at the same shear rate and a temperature of 270°C (520°F), the viscosity measures approximately 52 Pa·s. This example applies to polyethylene (PE).

processing data

Aside from viscosity, other factors also influence the processibility of plastics in the injection molding process. The summary table in Figure 1-10 shows some of the types of plastics used in injection molding, as well as the characteristic material properties which are important in processing (e.g., shrinkage in processing, flowability, and processing temperature range).

Chemical name composition	ISO 1043 DIN 7728	Density [g/cm³]	Processing temperature [°]	Flowability g = good m = medium p = poor	Shrinkage in processing [%] r = glass-fiber reinforced
Polystyrene	PS	1.05	180–280	g	0.3–0.8
Styrene-butadiene copolymers	SB	1.05	180–280	g	0.4–0.7
Styrene-acrylonitrile compolymers	SAN	1.07	200-260	m	0.4-0.7; 0.1–0.3r
Acrylonitrile-butadiene-styrene copolymers	ABS	1.08–1.12	210–270	m p	0.4–0.7 0.2–0.4r
Polyethylene	PE	0.91–0.97	180–270 240–300	g m p	1.2–2.8; 1.2–2.5
Polymethyl methacrylate	PMMA	1.18	170–240	m	0.3–0.7
Polyamide	PA	1.04–1.15	230–290	g	0.7–2.0; 0.2–0.8r
Cellulose acetate	CA	1.31	180–230	g	0.4–0.7
Polycarbonate	PC	1.20	280–320	p	0.6–0.8; 0.2–0.5r
Polyvinyl chloride, rigid (unplasticized)	PVC	1.38	190–210	p	0.4–0.7
Polyoxymethylene	POM	1.41	180–230	m	1.8–3.0; 0.2–0.6r
Polypropylene	PP	0.91	240–300	m p	0.5–1.2r

Figure 1-10 Important material characteristics

processing temperature range

It can be seen from the table that the range of processing temperatures is very narrow for some thermoplastics but very broad for others. For example, PVC-U (unplasticized or rigid PVC) can only be processed within a very narrow temperature range (190–210°C, 374–410°F), while POM can be processed between 180 and 230°C (356–446°F). Cif. no. 10 and no. 11 in Figure 1-10).

CD-material characteristics (PC)

The subsequent Table (Figure 1-11) shows the material properties of PC, from which CDs are produced, as well as the setting parameters, which were used for programming the injection molding machine employed.

Material properties
Solid, rigid, impact resistant up to −100°C, (−148°F), high heat resistance, crystal clear, non-toxic.

Resistant to
Oil, gasoline, diluted acids, alcohol, waxes, fats, simple soaps

Not resistant to
Strong acids, alkali solutions, benzene, amines, ammonia, some solvent components.

Material characteristics
Flame retardant, extinguishes away from flame, burns brightly, produces soot, chars, forms blisters, smells of phenol.

Cylinder temperature

Heating zone 1	230–260°C
Heating zone 2	250-300°C
Heating zone 3	260–320°C
Heating zone 4	260–320°C
Nozzle zone	280–330°C

Injection pressure
Very high injection pressures (1300–1800 bar = 19.000–26.000 psi) are required, as the material is extremely viscous.

Holding pressure
Pressure usually amounts to about 40–60% of the injection pressure.

Back pressure
50–150 bar (725–2175 psi)

Injection speed
Subject to length of flowpath and wall-thickness. Fast injection for thin walls. Where good surface quality has been specified, injection should be a little slower.

Screw RPM
High screw torque required, therefore medium screw speeds should be applied.

Melt cushion
2–6 mm (0.08–0.24"), subject to feed volume.

Mold temperature
Not lower than 85°C (185°F). Mold filling and article quality improve with increasing temperature. High mold temperature increases cycle time only marginally, as the glass transition temperature is at 145°C (293°F).

Pre-drying
4–12 hours (high-speed drying oven 2–5 hours) at 100–120°C (212–248°F). Optimum elongation, hardness and notched impact strength are obtained at a moisture content below 0.02%.

Shrinkage
0.7–0.8%; 0.1–0.5% with PC-GF (glass filled).

Injection volume
15–85% of the respective cylinder volume.

Shutting the machine down
If production is stopped over night, purge the cylinder of material and keep heat on at 160–180°C (32–356°F).

Figure 1-11 Processing values of polycarbonate (PC)

The terms used in the table are explained in greater detail in subsequent lessons.

CD

It will be obvious by now, that many factors must be considered in order to produce high quality moldings. The processing values can also vary within wide ranges. The molding of CDs requires a PC of very low viscosity and a processing temperature range of 320–360°C (610–680°F). Low viscosity is needed, in order to enable the melt to reproduce the fine geometry of the pits on the information side of the CD with high precision. If this is not accomplished, data will be lost. Although CD-players have built-in error correction, this is capable of correcting lost information (non-existent or only partially formed pits) to a limited extent only.

Review Questions

No.	*Question*	*Choices*
1.	Three overall classes of plastics are distinguished from one another. They include thermosets, thermoplastics and _____.	monomers synthesis elastomers
2.	Thermoplastics are soluble and _____.	densely cross-linked fusible nonfusible
3.	Amorphous thermoplastics are _____ when they are not combined with fillers or similar additives.	transparent milky opaque
4.	Polycarbonate (PC), from which Compact Disks are molded, is a(n) _____ thermoplastic.	amorphous semicrystalline
5.	_____ cannot be fused or dissolved but can be swelled.	Thermoplastics Elastomers Thermosets
6.	Thermosets are nonfusible and _____.	soft densely cross-linked
7.	The intermolecular forces which operate in the crystalline state are considerably _____ than those in the amorphous state.	weaker stronger
8.	The abbreviation for polyamide, as specified by ISO 1043, is _____.	PS PA PC
9.	Processing temperatures are _____ for thermoplastics than for metals.	higher lower
10.	Viscosity is a measure of the _____ of a melt.	hardness flow properties
11.	As temperature decreases, the viscosity of the melt _____.	increases decreases
12.	Injection molding is described as a _____ method.	reshaping primary processing
13.	Injection molding requires that the polymer is in a state described as _____.	thermoplastic thermoelastic

Lesson 2

The Injection Molding Machine

Key Questions

What types of injection molding machines exist?
What is the required size of an injection molding machine?
What major components make up an injection molding machine?

Contents

2.1 Classification of Injection Molding Machines
2.2 Structural Units of Injection Molding Machines
2.3 Special Injection Molding Processes

Review Questions

Prerequisite Knowledge

Basic Principles of Plastics (Lesson 1)

2.1 Classification of Injection Molding Machines

machine size

In principle, of course, it could be stated that the size of the machine must be chosen in accordance with the size of the molded article: the larger the molding, the larger the machine. But this isn't always true, especially where small molded parts are concerned. It is usually much more economical to manufacture many small moldings simultaneously on a large machine, than to manufacture just one article at a time on a small machine.

article weight

The size of the molded part – especially in its relation to machine selection – requires a closer examination. It should first be explained that 'size' is defined as volume. The heavier the article, the more molding compound must be provided by the plasticating and injection unit within a given period of time.

projected article area

Apart from a molding's volume, its dimensions must also be considered. The selection of a machine for the production of a given molding is primarily determined by the 'projected area' of that article – i.e., the area which projects in the clamping direction. The meaning of this concept is illustrated in Figure 2-1.

CD

With the CD, the projected area equals the circular surface formed by the CD. Because the diameter of the CD is 120 mm (4.75 in), the projected area is 113 cm^2 (17.5 in^2).

forces

With injection molding, the molding compound is injected into the mold under high pressure, which can be in excess of 2000 bar (29,000 psi) or 200 N/mm^2 (1 bar = 10^5 N/m^2 = 10^5 Pa). By way of comparison, an automobile tire holds a pressure of approximately 2 bar (29 psi). The mold must be held shut against the injection pressure so that no molding compound escapes at the

clamping force

parting line between the mold halves (flash). This clamping force is provided by the clamping unit. Injection molding machines are classified into sizes which correspond to this clamping force (12 – 8000 t).

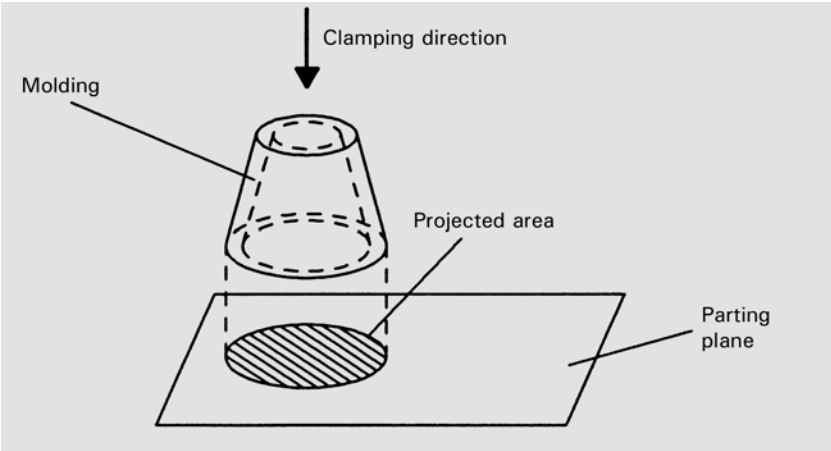

Figure 2-1 Projected area

parting force
projected area

The force acting against the clamping force, thereby attempting to part the mold, is known as the mold parting force. It results from the pressure acting upon the melt, multiplied by the article's projected area, which lies in the clamping movement direction.

quality

In order to achieve good quality moldings, i.e. without flash, the mold parting force must be lower than the machine's clamping force.

Lesson 1 provided an overview of the various materials which can be processed by injection molding. These materials have very different properties and must be processed under very different conditions. For this reason, there exists also a wide variety of injection molding machines. However, all injection molding machines are comprised of the same major modules. Examples of injection molding machines are given in the subsequent illustrations.

horizontal injection molding machine

The processing of thermoplastics usually involves the use of horizontal injection molding machines (see Figure 2-2). Because the parting plane between the mold halves is arranged vertically, the completed articles can drop into a container, once they are released from the mold.

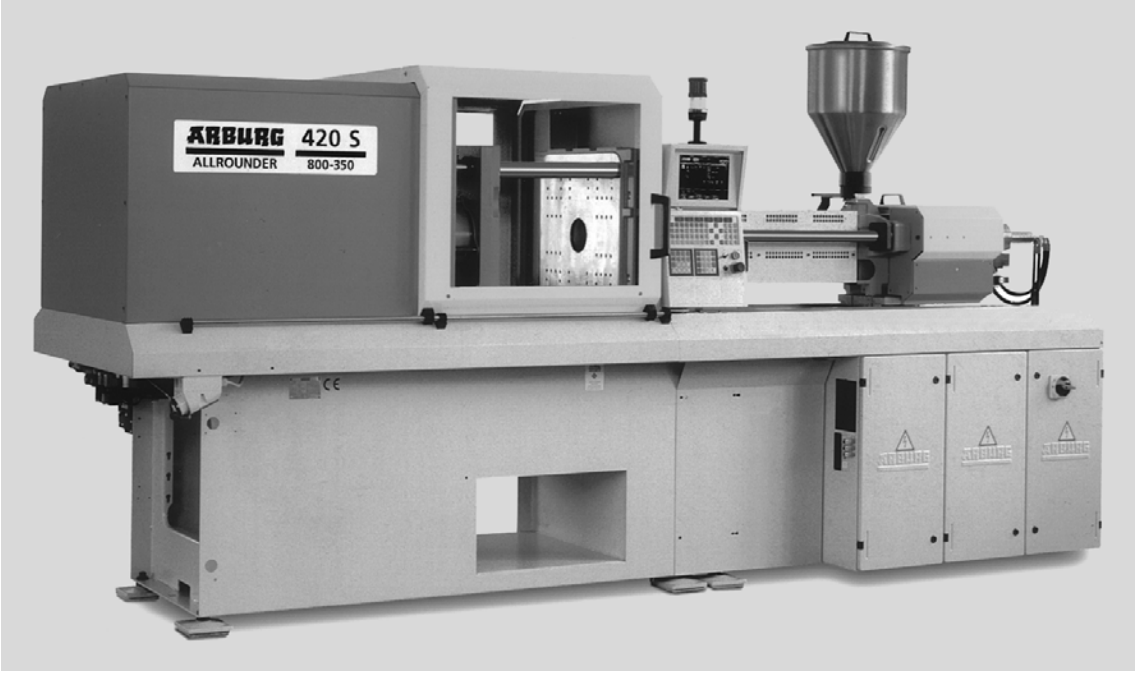

Figure 2-2 Horizontal injection molding machine (Photo Arburg)

vertical injection molding machine

In the vertical machine, the parting plane between the mold halves runs horizontally. As a result, this machine is especially well suited to the production of insert moldings (e.g., electrical plugs) (see Figure 2-3). Most moldings made of elastomers are produced on vertical machines.

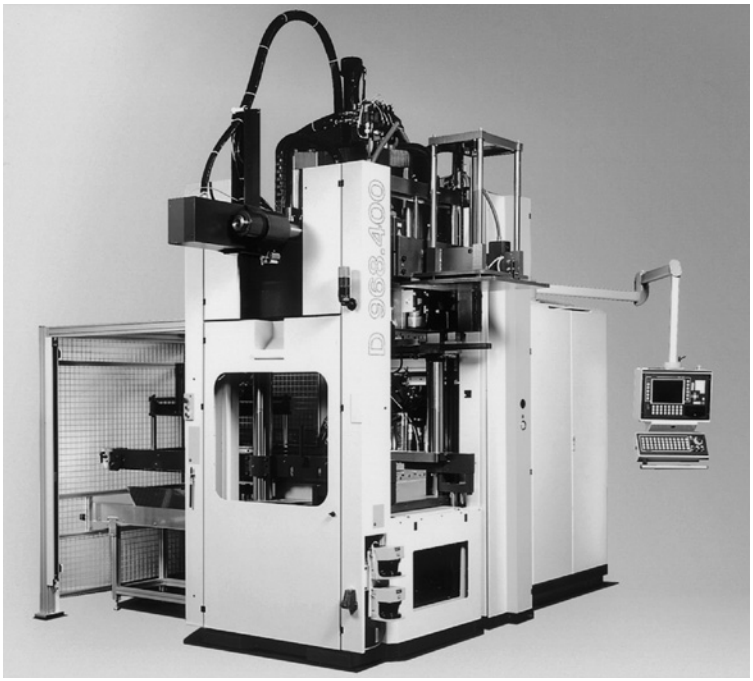

Figure 2-3 Vertical injection molding machine (Photo Kloeckner Desma Elastomertechnik)

rotary table machine

With rotary table machines, several clamping units are assigned to a single plasticating unit. As a result, this machine is best suited to molding articles requiring a long cooling or heating period (see Figure 2-4).

Demands for producing complex articles as cost-effectively as possible, without loss of quality or falling behind schedule, has set the plastics processing industry new tasks. As specifications can no longer be met by conventional injection molding methods, special processes – such as multi-component injection molding – have to be applied (see Chapter 2.3). With multi-component injection molding, at least two plasticating injection units are assigned to a single clamping unit. This method allows two differently colored plastics materials (automobile rear-lights) to be injected one over the other, forming a single molding (nesting molding, Figure 2-5).

Figure 2-4 Rotary table machine (Photo Kloeckner Desma Elastomertechnik)

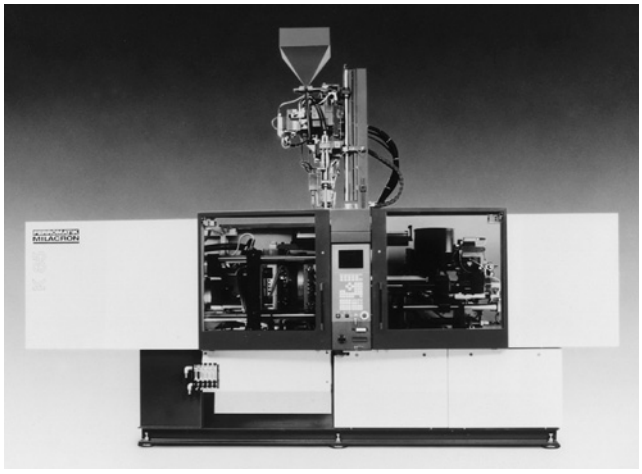

Figure 2-5 Two-component injection molding machine (Photo Ferromatik Milacron)

2.2 Structural Units of Injection Molding Machines

designs

Molded articles in a wide variety of sizes and shapes can be produced by injection molding. Production of these articles under optimum conditions requires alternative designs for the various sizes of injection molding machines, as well as their respective auxiliary equipment.

major modules

The major modules of an injection molding machine are common to all designs:

- Plasticating and injection unit
- Clamping unit
- Controls with hydraulic and electrical systems

An injection molding machine and its major structural units is shown in Figure 2-6.

mold

The mold is ordinarily not seen as a structural unit of the injection molding machine. However, in order to simplify matters, it will here be considered as part of the "overall" injection molding machine's system.

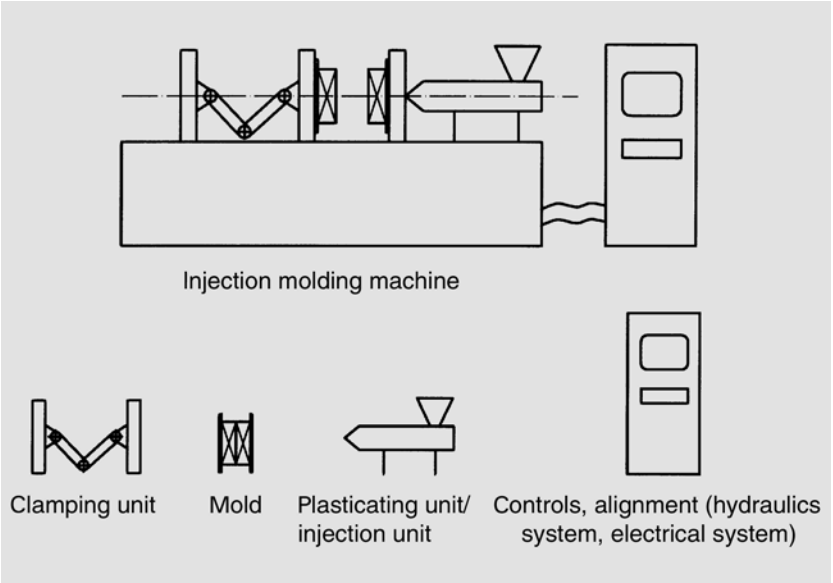

Figure 2-6 Major structural units of an injection molding machine

The moldings to be produced determine the relative positions of these structural or modular units to each other, as well as their sizes.

Various articles can be produced on a single injection molding machine, but each part requires its own (different) mold.

CD

The individual structural units of injection molding machines and their functions will now be described in greater detail. By way of an example, this description will refer to a machine used for molding CDs.

material flow through the injection molding machine

To understand the functions of individual modules, it is best to trace the path of the polymer through the machine from the raw resin (usually in granular form) to the finished product. The basic principle is demonstrated with the diagrammatic cross section of a CD-producing injection molding machine in Figure 2-7. The complete path of the material from hopper to mold is highlighted.

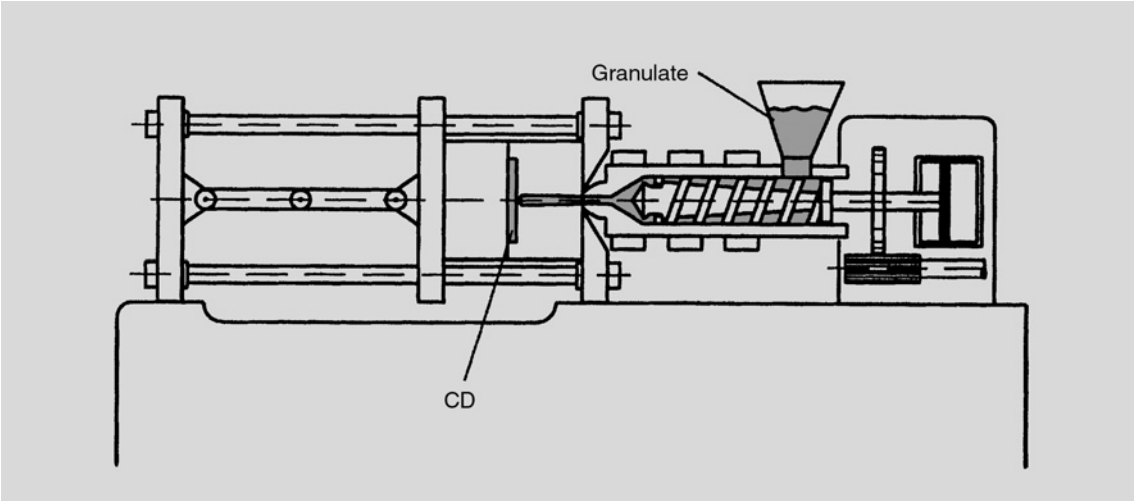

Figure 2-7 Sectional diagram of a horizontal injection molding machine

Production of the completed CD is much more complicated, of course. After it has been injection molded, it is given a metal coat by “sputtering”, which is necessary for reflecting the laser beam. The CD is subsequently subjected to quality checking and is then printed (see Figure 2-8).

Figure 2-8 CD-production center (Photo Leybold)

2.3 Special Injection Molding Processes

The demands for means of producing good quality complex moldings as cost-effectively as possible, confronted manufacturers of plastics processing machinery with a major task. As this challenge could no longer be met by conventional injection molding methods alone, special processes were called for. Some of these are briefly explained in the subsequent text.

2.3.1 Structural Foam Molding

structural foam molding

In an ideal case, an article molded by this process possesses a light, cellular internal structure and a smooth, all enveloping outer skin. This enables high mechanical strength to be achieved, combined with low weight. The process is usually employed with moldings of large volume, e.g. parts for the furniture industry.

2.3.2 Multi-Injection Molding Process

multi-component injection

In principle, all injection molding techniques, by which two or more materials are being processed, represent the multi-injection process. As only two materials are employed quite frequently, that is also known as two-component injection molding.

sandwich molding
gas-assisted injection molding

Sandwich molding as well as the gas-injection technology (GIT; also called gas-assisted injection molding (GAIM) or internal gas-pressure method) belong to what are termed 'sequential processes'. In either case, two different components are introduced into each other. A polymer is injected into the cavity first, followed by the injection of a different component, which then expands inside the melt. With the sandwich process, the second component also consists of a polymer, thus creating a sandwich structure, comprised of an inner core, covered by an outer skin. With the gas-injection technique, an inert gas (nitrogen) is employed as second component, thereby creating a hollow body (Figure 2-9).

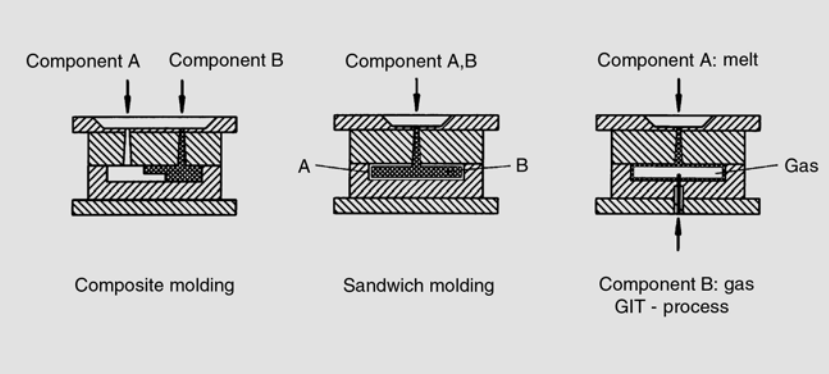

Figure 2-9 Injection molding processing variations

When producing articles by the sandwich injection molding technique for instance, new material is mostly used for forming the outer skin, whereas recycled material can be employed as core component. This enables a substantial amount of recycling material to be used, without adversely affecting the finished article's appearance.

two-component molding

The application range for the gas-injection method is found in the production of long and thickwalled moldings, e.g. handles or automobile clutch pedals, in order to reduce material content and article shrinkage. But it is also employed with large-surfaced moldings, e.g. doors for copying machines. Here it is applied with ribs, for increasing rigidity and thus for reducing warpage.

With the laminating method, two components are injection molded so as to become bonded to each other by lamination. In this case, the injected materials may be of different grades. Or they can be of an identical component, but differently colored.

Examples for the first instance are rigid-flexible combinations, e.g. a flexible seal injected onto a rigid structural component. In the second case, rearlights or computer keyboard elements come to mind.

2.3.3 Injection-Compression Molding

injection compression molding

In common with the gas-injection- or structural foam molding processes, injection-compression molding also aims at producing thickwalled articles, free of warping or sink-marks. It is presently even employed for producing moldings with long flow-paths.

Injection-compression molding can roughly be divided into the two processing steps of injection and compression. During the injection phase, a precisely metered amount of melt is injected into the mold, which is open for just the length of the necessary compression stroke (Figure 2-10). As at that moment the cavity's volume is larger than that of the subsequently produced molding, the injected melt accumulates as bulk. During the compression phase, this bulk is spread and pressed into shape (molded) inside the cavity by the closing of the moving mold half. This presupposes, that with the start of the compression phase the sprue-bush is shut off, in order to prevent the melt escaping from the mold cavity. Due to larger wall thicknesses, pressures are lower with injection compression molding, compared to straight injection molding.

That technology also reduces orientations in the molding. For that reason, DVDs which are only half as thick as CDs, are produced by the injection-compression process. (DVD = Digital Versatile Disk; data storage medium of greater capacity than the CD).

2.3.4 Back-Injection Technology

in-mold decoration

This is a processing method, by which decor moldings can be produced by the injection molding process, requiring just a few working steps. The moldings are composed of a thermoplastic substrate and decor material, which mainly consists of film or textiles.

The decor material is draped inside the mold and back-injected with the material forming the substrate. Application examples are mobile phone housings or inside panels of car doors.

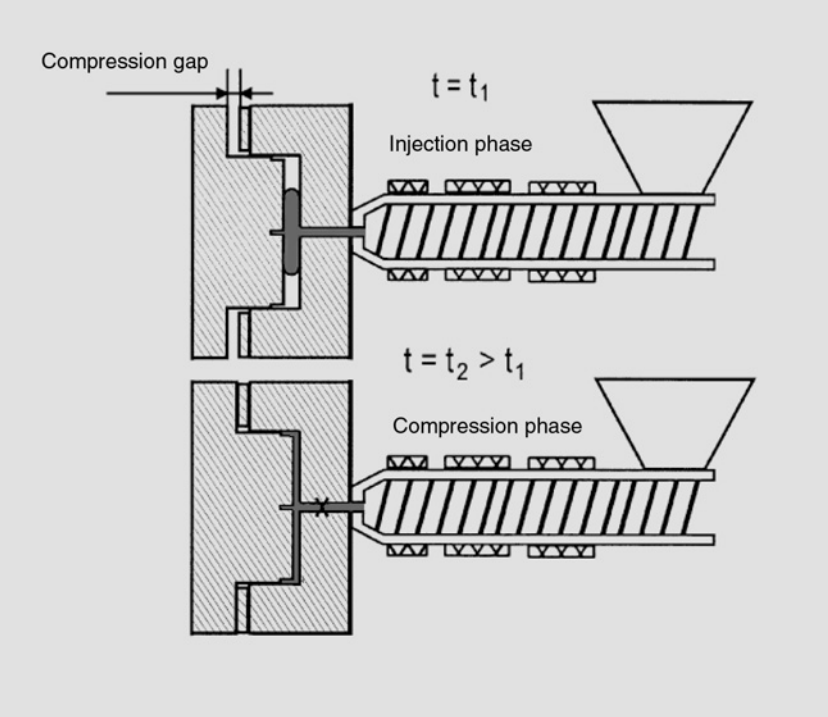

Figure 2-10 Injection-compression molding process sequence

Review Questions

No.	*Question*	*Choices*
1.	An injection molding machine consists of the following major components: plasticating unit/injection unit, mold, controls, and _____.	transport unit clamping unit lifting unit
2.	'Projected area' is defined as the _____.	effective area in the clamping direction greatest area of the part
3.	The CD has a diameter of 120 mm (4.75 in). The projected area is approximately _____ cm^2 _____ in^2.	cm^2 in^2 113 17.5 226 35.0
4.	To provide the required injection pressure of 5000 N/cm^2 (7250 psi) for manufacturing a CD, the machine must have a clamping force of up to _____ kN (_____ t).	kN t 500 50 1000 100 1500 150
5.	The volume and _____ of the molded part are criteria used in selecting a machine for its manufacture.	color projected area length
6.	The injection pressure of a machine can be over _____ bar, _____ psi.	bar psi 2000 29 000 20 290 200 2900
7.	The clamping unit and plasticating unit of a horizontal machine are located _____.	side by side one above the other
8.	For reducing warping on large-surfaced moldings, _____ is employed.	composite molding gas-injection technology
9.	Decorated articles are produced with the injection molding method known as _____	back-injection technology structural foam molding

Lesson 3

The Plasticating and Injection Unit

Key Questions

What functions must be fulfilled by the plasticating and injection unit?
Which components make up this structural unit?
Into which zones is the plasticating screw divided?

Contents

3.1 Tasks of the Plasticating and Injection Unit
3.2 Plasticating
3.3 Injection

Review Questions

Prerequisite Knowledge

Basic Principles of Plastics (Lesson 1)
The Injection Molding Machine (Lesson 2)

3.1 Tasks of the Plasticating and Injection Unit

Main Functions

main functions

The main functions of the plasticating and injection unit can be divided as follows (Figure 3-1).

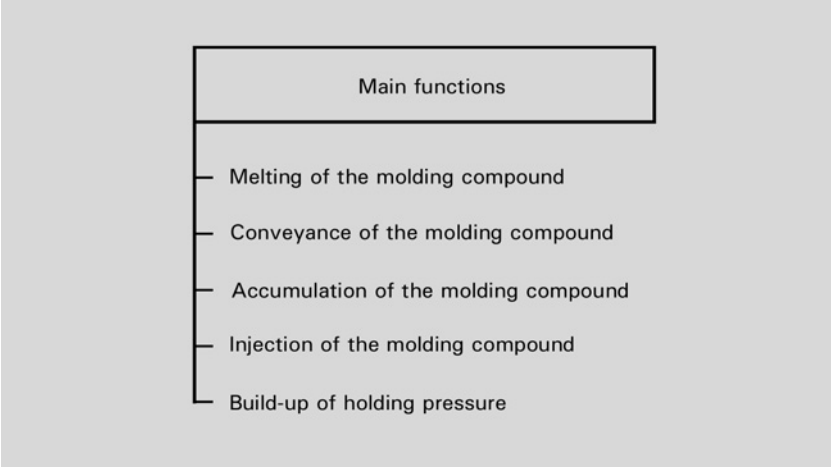

Figure 3-1 Main functions of the plasticating- and injection unit

CD

The individual functions of the plasticating and injection unit are described here as they apply to the molding of Compact Disks, produced from a crystal clear material, so that the laser can read the information. The CD is therefore made from an amorphous thermoplastic. Being opaque – apart from other material properties – disqualifies thermosets and elastomers from CD production.

Melting

granulate

The polymer is commonly supplied by the manufacturer in various forms, depending on its type. Thermoplastics are usually supplied in the form of a granulate composed of small, cylindrical or lenticular particles with a diameter of 2 – 3 mm (approx. $\frac{1}{8}$ in) and 2 – 3 mm long. The granulate is delivered in sacks, or with larger quantities in special containers or by bulk-carriers.

Let's pursue the subject of thermoplastics, which are supplied to the machine in granulate form. This granulate is loaded from the sack into the hopper by hand. Larger quantities may be fed automatically from a silo. The hopper is installed on top of the plasticating and injection unit. Figure 3-2 shows a cross section of a plasticating and injection unit.

melting
dissipation

Above all, the plasticating and injection unit must convert this granulate into a homogeneous melt, capable of filling the mold cavity completely. In other words, the ensuing melt must be 'pourable.' For that purpose, the molding compound is heated, until it melts (Figure 3-3). This is achieved by friction

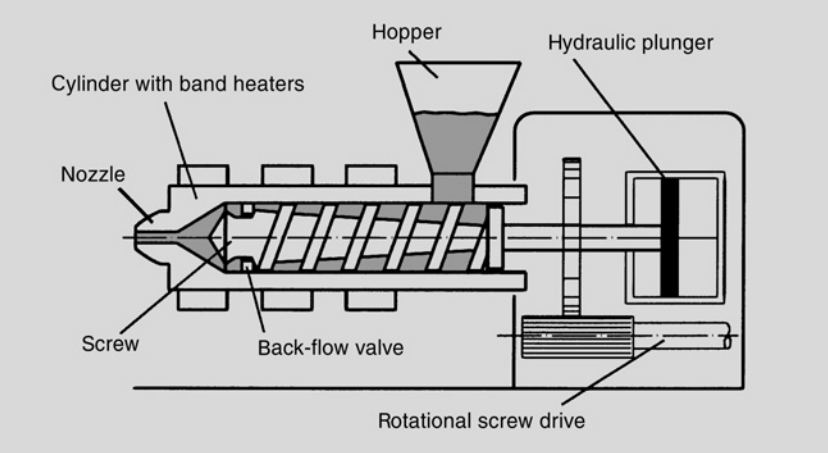

Figure 3-2 Plasticating- and injection unit

(dissipation) between granulate particles, as well as heat introduced from outside (convection, heat conductivity).

convection
heat conductivity

The plasticating and injection unit must therefore be heatable. With thermoplastics, this is usually achieved by clamping electric heaterbands around the cylinder. Heating can be set to a certain temperature profile.

heater bands

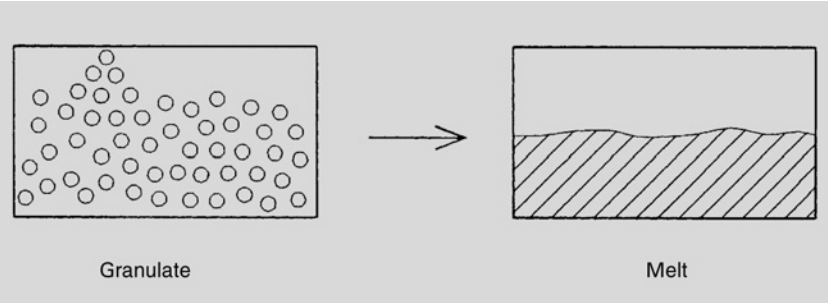

Figure 3-3 Melting

Thermoplastics consist of macromolecules with over 10,000 chain elements. When we speak of 'pouring' here, we are not referring to a liquid, such as water. A thermoplastic which has been prepared so that it can be injection molded displays flow properties roughly similar to those of honey.

Homogenization

Another task of the plasticating and injection unit is illustrated by colored molded parts, such as salad bowls, coffee mugs, trash cans, or bottle crates. To manufacture such a colored part with an injection molding machine, the desired colorant must be admixed with the granulate. The reason for this is that most thermoplastics are either colorless or light colored and translucent in their natural states. In some cases, this admixing has already been performed by the manufacturer of the thermoplastic. The particles are then colored

colorants

uniformly. However, it is more common for the admixing to be performed at the processing plant. In the latter case, particles with a high concentration of colorant (masterbatch) are added to the granulate.

masterbatch

The plasticating and injection unit must therefore be capable of processing the material uniformly. The material must be homogenized; that is, all constituents must be thoroughly mixed together (see Figure 3-4). The granulate or melt must be mixed with the colorant particles so thoroughly, that the finished article exhibits a perfectly uniform color.

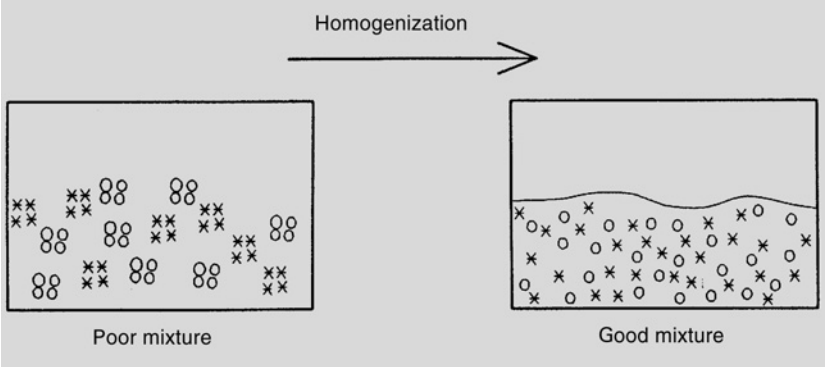

Figure 3-4 Homogenization

homogenization additives

Apart from colorant, other additives are also employed, such as antioxidants (stabilizers) or fillers. The latter reduce the article cost, because they are cheaper than the basic material.

CD

Although the CD is produced in a crystal clear plastic without filler, it is especially important for the material to be thoroughly homogenized in this application. A laser reads the information (music or other data) on the CD through the thickness of the plastic. Therefore that material must be of very uniform consistency, in order to prevent distortion of the information.

Structure of the Plasticating and Injection Unit

injection

Once the material has been uniformly prepared, it is important to ensure, that it can be conveyed into the mold itself. This must occur very rapidly. It requires high pressure because of the material's viscosity. One of the plasticating and injection unit's main tasks therefore is the rapid injection of the melt into the mold.

As indicated by the name *plasticating and injection unit*, the purpose of this module can be divided into

- "Plasticating" and
- "Injection".

These two functions are subsequently explained in more detail, in conjunction with that structural unit's components.

3.2 Plasticating

hopper

The granulate is loaded into the hopper on the machine and is thus available for further processing. The granulate leaves the hopper and enters the feed zone of the screw.

screw rotation

A rotating screw conveys the compound towards the nozzle. The screw rotation repeatedly brings the material into contact with the hot cylinder wall as the material moves forward.

screw speed

cylinder temperature

Frictional heat is also produced by this motion. The homogeneity of the melt – an extremely important factor in obtaining high-quality moldings – is decisively influenced by the temperature of the cylinder wall and the rotational speed of the screw. While thermoplastics are heated to a temperature of 180–300°C (360–570°F), elastomers are heated to only about 100°C (212°F) in order to prevent premature cross-linking.

back pressure

So-called back pressure is also applied to the screw by the hydraulic plunger. Back pressure is purposely applied to hinder the compound from moving forward over the flights of the screw. This resistance further enhances homogenization.

screw geometry

Each screw displays a certain geometry, which determines the dimensions of a screw. The geometry of a conventional screw employed in injection molding and the related terms are shown in Figure 3-5.

zones

So that the molding compound is plasticated quickly and uniformly, the screw is generally divided into three zones (see Figure 3-6).

feed zone

compression zone

In the *feed zone* (the screw's rear section), the material is fed-in from the hopper and conveyed in the direction of the nozzle. In the middle portion of the screw (the *compression zone* or *conversion zone*) the material is compressed, deaerated, and melted as a result of the decreasing channel depth.

discharge zone
metering zone

In the forward screw zone (the *discharge zone* or *metering zone*), additional homogenization of the material takes place. Pressure is also built up within the material.

nozzle

Once the plasticated material has been conveyed towards the nozzle by the screw, it is stored before it is injected into the mold. The melt must be injected into the mold at very high speed, so that all of the metered shot enters the cavity in a fully thermoplastic state. The capacity of the plasticating unit is insufficient to deliver the melt that fast, while also achieving a high degree of homogenization. Therefore, the melt produced must be stored between plasticating and injection operations.

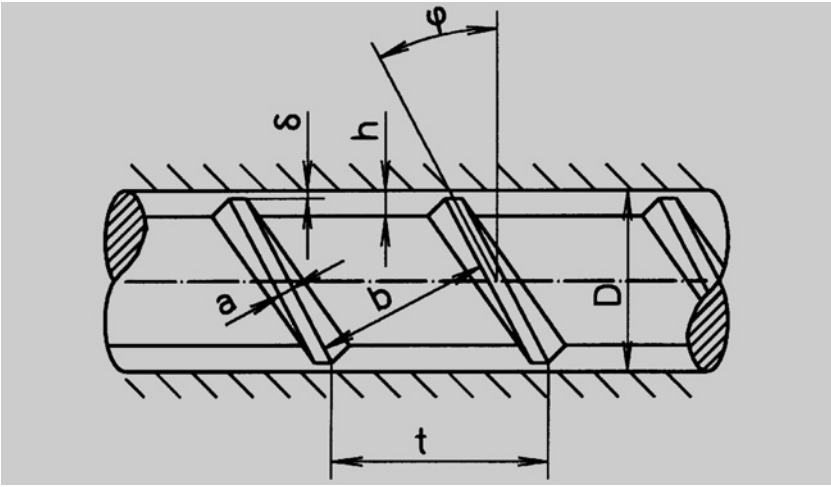

Figure 3-5 Geometry of a conventional injection molding screw
Legend:

t [mm] = pitch	δ [mm] = screw clearance (radial play)
b [mm] = channel width	D [mm] = diameter
a [mm] = land width	φ [°] = pitch angle
h [mm] = channel depth	

axial screw motion

For this reason, most injection molding machines for thermoplastics are equipped with screws, that can move in the axial direction. However, there are also other designs. The conveyance of the compound in the direction of the nozzle causes the material to collect in front of the screw tip (ante-chamber). As this happens, the screw is forced backward. As soon as the screw has traveled a certain predetermined distance and the desired amount of melt has accumulated in front of the screw, the rotational movement of the screw ceases and no further material is processed.

shut-off nozzle

The nozzle represents the outer limit of the injection- or ante-chamber (i.e., the space in front of the screw tip). The material is later injected through the nozzle and into the mold. However, no material should escape from the nozzle

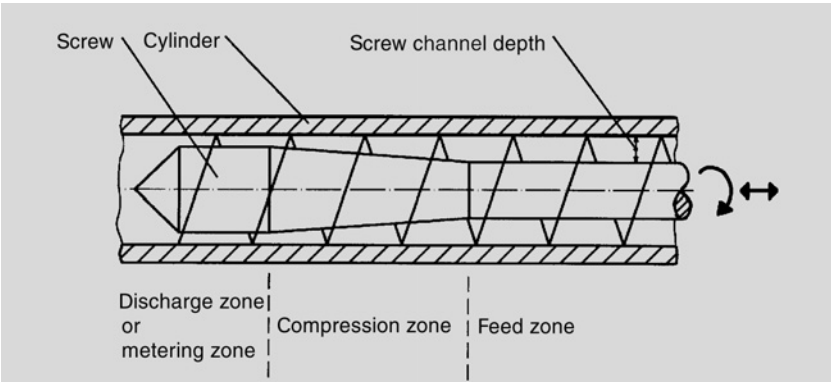

Figure 3-6 Three-zone screw

at any time other than during the injection phase, as this would reduce the amount of material remaining available for the injection operation. For this reason, there must be a provision for closing off the nozzle at least during the plasticating operation. Shut-off nozzles exist in various designs for this purpose. One example is the 'needle shut-off nozzle' shown in Figure 3-7.

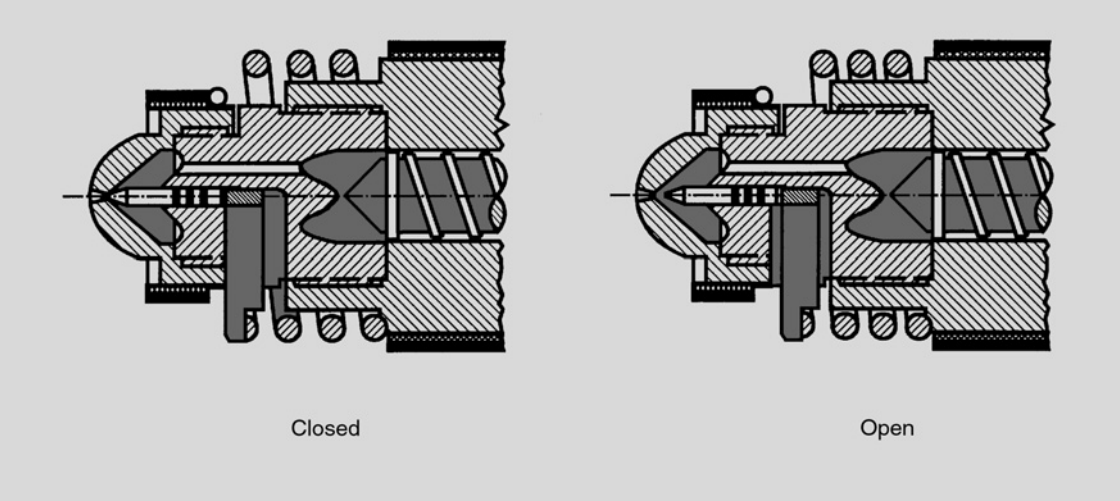

Figure 3-7 Needle shut-off nozzle (closed and open)

A nozzle which is held closed by the force of a spring is recognizable on the left side of the figure. The needle is pressed against the nozzle opening and thus closes off the plasticating unit. On the right side of the figure, the sealing needle rests against the stop to the right, thus allowing the molding compound to flow out of the nozzle.

open nozzle

Shut-off nozzles cannot be used with certain highly sensitive molding compounds because material could accumulate and decompose at the shut-off point. An open nozzle is used to process molding compounds of this type (PVC, POM) or to minimize the cost of machinery in general. It is impossible to completely prevent the escape of material through an open nozzle. This must be taken into account in the feed operation (by decompressing at the end of the feed phase).

As soon as a sufficient amount of material has accumulated in the injection chamber, the plasticating operation ends. The material is now ready for injection.

3.3 Injection

injection operation

The second function of the plasticating and injection unit is to convey the plasticated material – i.e. the melt which has accumulated in the injection chamber – into the mold. This must occur as quickly as possible so that the material does not solidify in the cold mold during the injection operation. Material which solidifies and is then conveyed onward during the injection

operation will lead to defective molded parts. But because even a molten plastic molding compound is not really 'liquid' (in the sense of water, for example), and because it is sometimes necessary to fill very complicated molds, it is easy to understand that very high pressure is required to fill the mold cavity or cavities under these conditions.

machine controls

The screw must therefore be capable of being moved forward at a high speed and under high pressure for the purpose of injecting the molding compound into the mold cavities. At the same time, however, the pressure and speed must be adjusted very precisely with the machine controls so that the mold and molding compound are not subjected to excessive stresses.

back flow

If pressure is applied to the melt in the injection chamber, the material will naturally try to escape this pressure. The resulting conveyance of the material into the mold is exactly what the process requires. At the same time, however, it is conceivable that the material will try to escape the pressure by flowing back along the screw in the direction of the hopper. This must be prevented at all costs. It requires a type of valve which allows the molding compound to flow along the screw in the direction of the nozzle, but does not allow it to flow back from the injection chamber into the screw.

non-return valve

This valve is called a non-return valve (also known as checkring valve), in description of its operation. It basically consists of a sliding seating valve, fitted to a matching screw tip. As long as the pressure along the screw is higher than the pressure within the injection chamber, the slide valve lets the melt pass in the direction of the injection chamber without restriction. As soon as this pressure ratio reverses itself (at the beginning of the injection phase), the non-return valve closes, with the check-ring forming a plunger in conjunction with the screw-tip.

The left side of Figure 3-8 shows the non-return valve in the open position, in which melt can pass into the injection chamber. On the right, the non-return

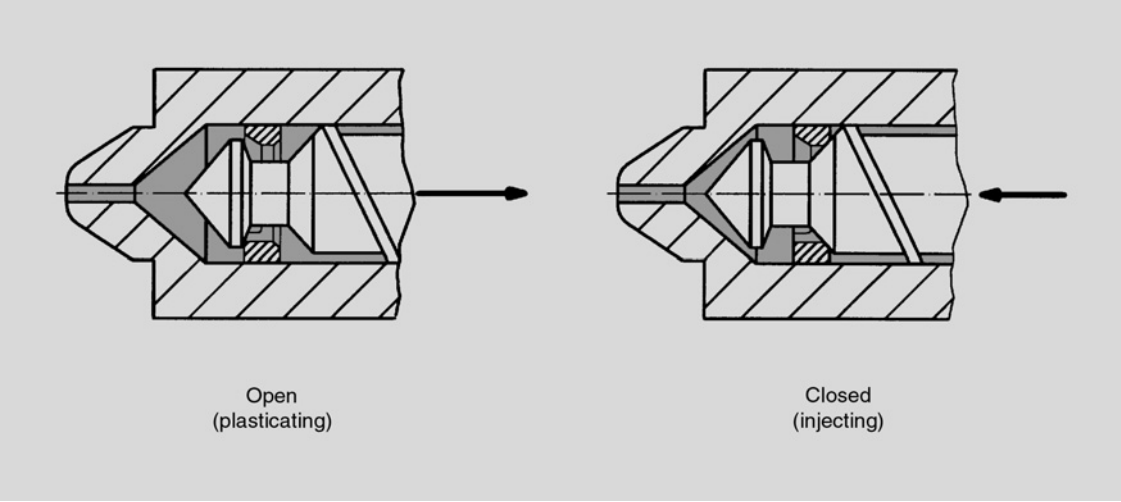

Figure 3-8 Non-return valve (open and closed)

valve is shown in the closed (plunger) position, in which the melt's only way of escape is through the nozzle.

The non-return valve – like the shut-off valve – cannot be used with heat sensitive materials, because it would cause undesirable accumulation and decomposition of these materials.

Review Questions

No.	*Question*	*Choice*
1.	The plasticating and injection unit must fulfill the functions of melting, homogenizing, storing and _____.	injection cooling cross-linking
2.	Thermoplastics are usually supplied to the processing operation in the form of _____.	strips 'sauerkraut' a granulate
3.	When a plastic is colored, the colorant particles must be mixed into the molding compound to a sufficient degree of homogeneity so that the finished molded part is _____ colored.	uniformly nonuniformly
4.	Thermoplastic material is heated along its path to the nozzle by externally supplied heat and _____.	internal friction combustion
5.	The conventional three-zone screw is divided into the following regions: feed zone, compression zone, and _____.	metering zone injection unit
6.	_____ are used to prevent the molding compound from escaping from the nozzle.	compression zones shut-off nozzles three-zone screws
7.	_____ are used to prevent the molding compound from flowing back out of the injection chamber into the screw during the injection operation.	needle shut-off nozzles non-return valves metering zones

Lesson 4

The Mold

Key Questions

What are the tasks of the injection molding tool?
Which modules is the mold comprised of?
What types of gating and runner systems exist?
What types of heating/cooling systems are available?
What types of removal systems exist?

Contents

4.1 Tasks and Modes of Operation
4.2 Gating and Runner System
4.3 Cavity
4.4 Heating/Cooling Systems
4.5 Ejection System

Review Questions

Prerequisite Knowledge

Basic Principles of Plastics (Lesson 1)
The Plasticating and Injection Unit (Lesson 3)

4.1 Tasks and Modes of Operation

primary tasks

secondary tasks

The primary tasks of an injection molding tool consist of accommodating and distributing the melt, the forming/shaping and cooling of the molded article and its removal from the mold. (With thermosets/elastomers: also the introduction of activation/curing energy). The secondary tasks of absorbing the forces, transmitting motion, and guiding the molded parts are derived from these primary tasks.

injection or ante-chamber

To clarify the tasks and functions of an injection mold, it is best to follow the path of the material within the injection molding machine all the way to the development of the finished article. The material has been conveyed into the injection chamber during the course of the plasticating phase. Along the way it has been melted and homogenized.

injection operation

The prepared, flowable material is transported from the injection chamber of the plasticating and injection unit into the mold. In other words, it is 'injection molded.'

cavity

The impression space into which the molding compound is injected – known as cavity – is located within the mold. The material solidifies by cooling within the cavity, thus forming the molding. With thermosets/elastomers, the article is produced by chemical crosslinking reaction.

single-impression mold

Each cycle of the injection molding process often produces only one molding. In this case, we speak of a 'single-impression mold'.

multi-impression mold

The number of parts produced in each cycle can exceed 100 (for example, small silicone moldings). This involves the use of 'multi-impression molds' (see Figure 4-1).

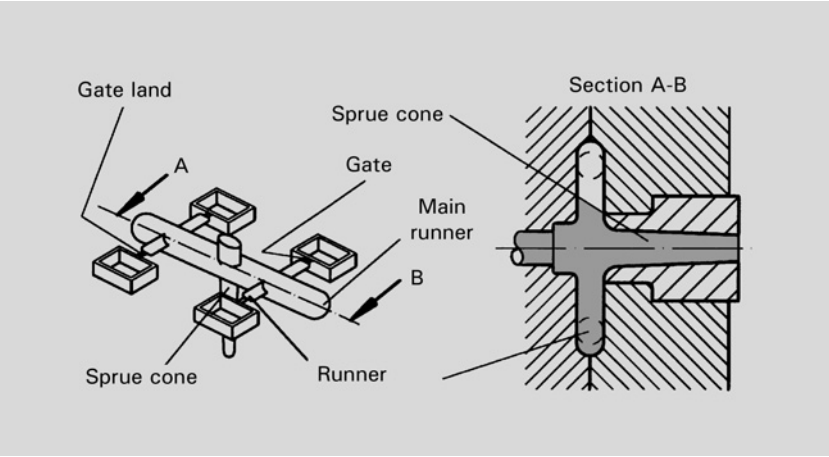

Figure 4-1 Gating and runner system for a four-impression mold

4.2 Gating and Runner System

4.2.1 Basic Principles

sprue, runner, gating

The molding compound flowing from the nozzle enters the mold and is distributed into the cavities. This is the task of the sprue- and runner system (see Figure 4-1). It consists of several sections, that may differ in design, subject to requirement. As the melt leaves the nozzle, it passes through the sprue bush and into the runner, which connects to the gates of the cavities.

The demands placed upon gating and runner system can be described in a single sentence:

rule

The gating and runner system must be so designed, that homogenous melt fills all cavities simultaneously and uniformly at equal pressure.

runner

The runner system is designed to suit the position of the cavities in the mold. Position and design of gates to cavities is primarily a function of the molded article's design and its specifications.

4.2.2 Gate Design

bar gate

The sprue- or bar gate (Figure 4-2) represents the simplest kind of gating. It is used for thickwalled moldings, and offers little resistance to the melt because of its large cross section. Its conical shape allows the melt to flow easily.

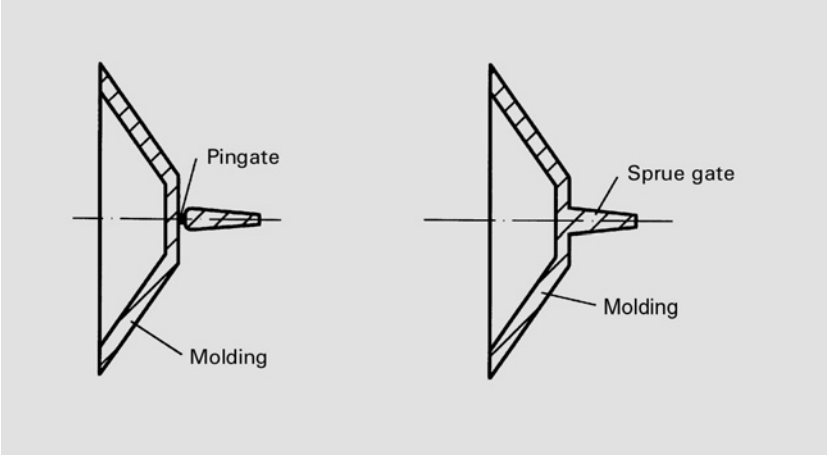

Figure 4-2 Sprue-gate and pin-gate

When the molding is ejected, the sprue is pulled off at the (warmer) nozzle end. Therefore, the stem remains on the molding and must be removed by an additional operation. The sprue-gate is employed on high quality technical articles and on thickwalled moldings.

pin gate

In contrast, the pin gate (Figure 4-2) is pulled off at its connecting point on the molded article, when this is removed. The pin gate thus leaves only a small mark on the molded part, requiring little or no finishing. Fully automatic degating is possible.

diaphragm gate

The diaphragm gate (Figure 4-3) is employed with axially symmetrical round articles. Initially, the melt is evenly distributed across the diaphragm gate and then flows uniformly into the cavity. This method prevents weldlines, which would occur, if several gates were used. This type of gate will subsequently have to be severed, however.

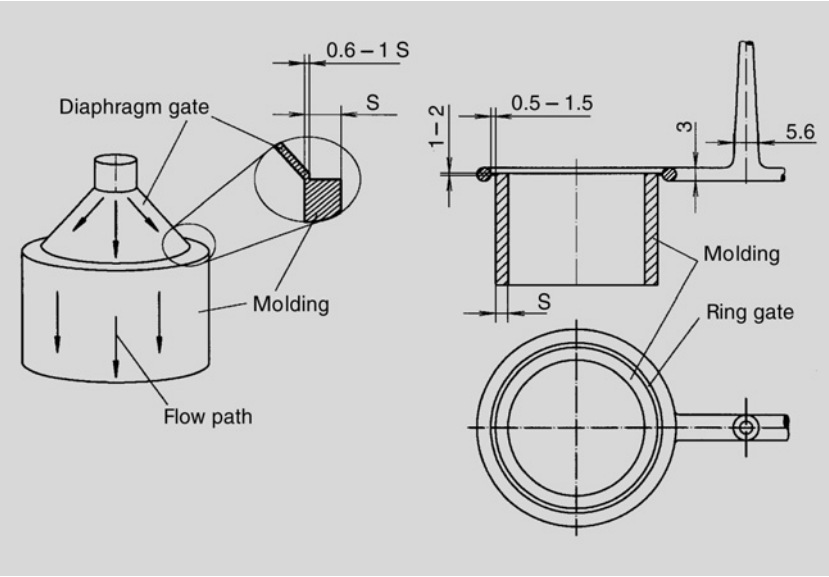

Figure 4-3 Diaphragm- and ring-gate

ring-gate

The ring gate is employed for round or sleeve-like articles, whose core – due to its length – needs supporting bilaterally. This enables even long-cored articles to be molded at an alround consistent wallthickness.

film gate

The filmgate (Figure 4-4) functions to the same principle as the diaphragm gate. It is used with flat moldings and assists cavity filling. (Leaves neither weld-lines nor other markings on the article's surface).

tunnel-gate

The tunnel gate (Figure 4-4) is mainly employed with multi-impression molds for small articles, as well as flexible molding compounds.The tunnel-like gate creates a sharp edge between mold guidance and tunnel, which separates the sprue-system from the article on demolding, thus ensuring automatic severance.

All the different sprue versions shown thus far share the disadvantage, that material is wasted in the gate- and runner-system. Only a portion of this material can be returned to the process by "internal recycling systems." For reasons of cost and environmental protection, an attempt is made to avoid such material wastes, by controlling the temperature of the gate- and runner-system in order to maintain the flowability of the melt in this area.

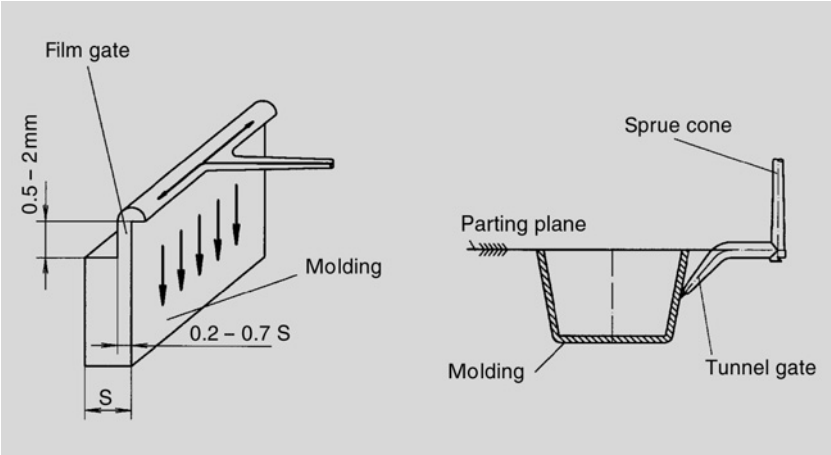

Figure 4-4 Film- and tunnel-gate

hot runner system
cold runner system

Hot runner systems are therefore used in the processing of thermoplastics. However, the processing of elastomers involves the use of cold runner systems, which prevent the elastomer compound from cross-linking prematurely in that system (see Figure 4-5).

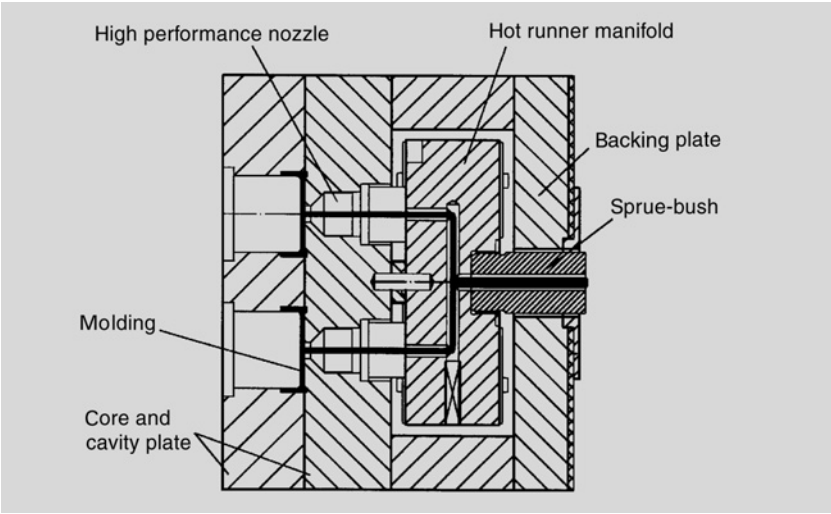

Figure 4-5 Hotrunner system

number of cavities

The more complicated and demanding articles for injection molding become, the fewer of them it will be possible to process simultaneously (i.e., in a single shot). The reason is, that the process will have to be monitored very precisely, in order to achieve the required properties. The more cavities a mold has, the more difficult it becomes to ensure, that each part is made under identical process conditions. Therefore, even hotrunner systems are mostly employed in molds of few cavities only.

CD

The CD is an example of such a complex molding described. It is subject to very demanding optical requirements. The CD is manufactured in a single-cavity mold by using a type of cone gate, which is punched out after the part has been removed from the mold. First signs of moving towards hotrunner systems for this application are also apparent.

4.3 Cavity

The flowing material passes through the gate and runner system into the mold cavity or cavities. Here the molding is formed by solidification of the molding compound (thermoplastics), or by crosslinking reaction (elastomers, thermosets).

shrinkage

A mold cavity (the 'casting mold' proper), is an exact negative image of the article being produced (see Figure 4-6). As with any casting process, however, the solidification of the molding compound brings about a decrease in the volume of the part being made. In other words, the molding shrinks.

Any type of casting mold – including the cavities in the injection molding process – must therefore be made slightly larger than the finished article. This

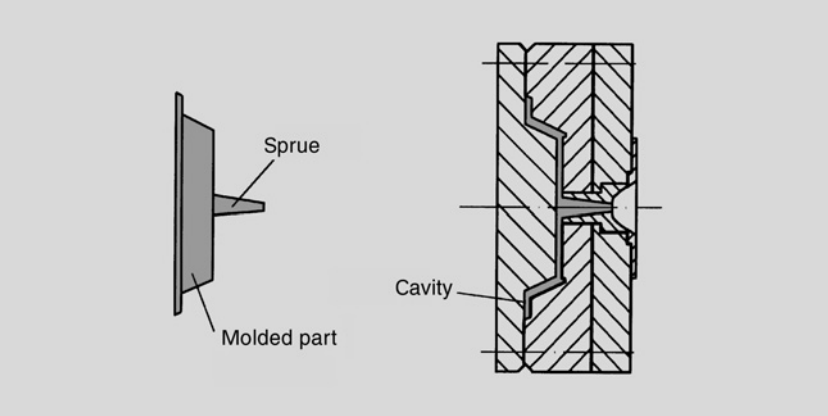

Figure 4-6 Example of a mold cavity

shrinkage compensation

extra dimension must equal the volume, that will be lost in shrinkage. In this manner, finished parts are produced to the correct dimensions. Examples include gears which are suitable for mounting in the drive mechanisms of kitchen appliances. The shrinkage of amorphous thermoplastics amounts to 0.5–0.8%. In part-crystalline thermoplastics it is 1–2%.

warpage

Beside shrinkage – which is determined by the material – there is also another type of dimensional deviation between the cavity and the finished molding, namely 'warpage' (see Figure 4-7). One example of article warpage is the apparent slight bending of long, flat surfaces.

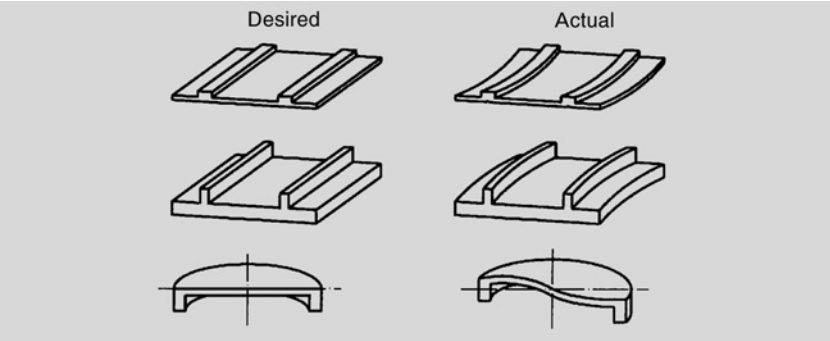

Figure 4-7 Warpage

cooling rate

Warpage develops as a result of different cooling rates in areas of the molding, which vary in thickness. Warpage is also caused by orientations, that develop during the injection process.

orientation

Orientations consist of the preferred directional alignments of the injected material's macromolecules.

ribs

Because long, flat surfaces on the molding are often unavoidable, ribs are used to reinforce the article's critical sections whenever possible. These ribs prevent deflection. Examples for this are housings for television sets, or doors on copying machines. When ribs cannot be used, other countermeasures must be employed. It is possible, to modify the mold cavity in such a way, that the finished article turns out straight through subsequent 'warpage'. This means, that warpage has been allowed for during the mold's design stage already. Another possibility is the employment of the gas injection technology. Gas is introduced systematically to generate a holding pressure in certain local areas, to counteract shrinkage and thus warpage (see Chapter 2.3).

gate position
surface mark

The gate usually produces a mark on the finished molding. Naturally, this mark should not occur in an especially visible part of the article. At the same time, however, there is a limit to the allowable complexity of the runner system's design. This is also a function of the maximum permissible flow-path length for the plastics material chosen, or the additional loss of material caused by a larger runner system. For these reasons, the position of the cavity within the mold is also subject to restrictions in some cases. Other limitations with the position of mold cavities arise from the ease, with which the molded article can be removed from the mold, without suffering damage.

4.4 Heating/Cooling Systems

The goal is to produce a solid, stable molding from the melt within the cavity. As explained earlier, thermoplastics have to undergo a solidification process, whereas thermosets/elastomers are subjected to a chemical crosslinking reaction.

cooling

We will examine this solidification process more closely, especially as it applies to thermoplastics. When a thermoplastic is processed, it is heated while in the plasticating unit. This heat is sufficient for the material to melt and for this melt to be injected into the mold cavity. That heat must then be removed from the melt in the mold, so that it can solidify into the final article. A mold employed for thermoplastics must therefore be able to carry heat away from the molding.

thermal conduction

cross-linking

The situation is different in the processing of reactive molding compounds (i.e., elastomers and thermosets). In fact, a certain amount of heat is introduced to these compounds in the plasticating unit to render them fluid. However, the article in the mold is not solidified by the hardening of the melt but by a chemical cross-linking reaction within the material. Heat is needed to set this reaction in motion. To mold an article from a reactive compound, the mold must therefore be capable of introducing heat into the molding.

heating/cooling systems

These two demands on the injection molding tool are thus fundamentally different. Therefore, there can also be great structural differences between molds used for the processing of thermoplastics and those employed for the processing of reactive molding compounds.

thermoplastics mold

For cooling purposes, molds used for the processing of thermoplastics are provided with channels in the vicinity of the cavity. Water flows through these channels. Figure 4-8 shows the structure of a heating system employing a liquid medium. To create a network of channels, longitudinal and transverse channels are drilled in the mold. These channels are then closed at certain positions, in order to create a circulation system for the heating/cooling medium. The temperature of this medium is usually between 30 and 100°C (86–212°F). The exact temperature depends on the molding compound.

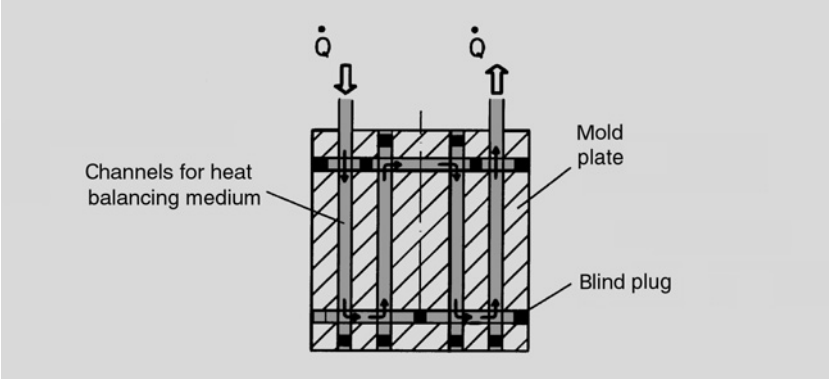

Figure 4-8 Heating system employing a liquid medium

elastomer mold
thermoset mold

Electric cartridge heaters are often used to heat elastomer molds and thermoset molds. Figure 4-9 shows a schematic diagram of an electric heating system. In this case, cartridge heaters are inserted into bores in the mold to achieve temperatures of 150–200°C (300–400°F) required for cross-linking.

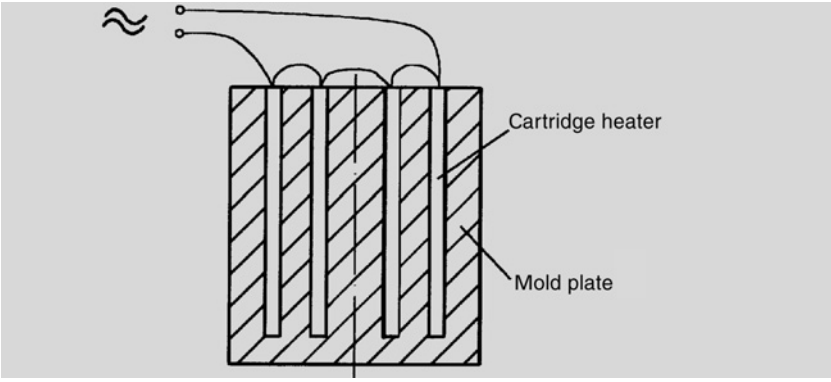

Figure 4-9 Schematic diagram of an electric heating system

It is also possible to employ a heat-balancing system, using a liquid heating medium. Due to the high temperatures involved, heat transfer oil is used primarily.

heat-balancing systems

The general term heat-balancing is used, because heat is being conducted in each case: either away from the cavity for thermoplastics (cooling), or toward the cavity for thermosets and elastomers (heating).

4.5 Ejection System

parting plane removal

Once the molding has solidified within the cavity at the end of the cycle, it is important to ensure, that the finished article can be removed from the mold. For that purpose, the mold consists of two halves, so that it can be opened at the parting plane. Figure 4-10 shows an open mold. In this diagram, the molding is being removed by the ejector.

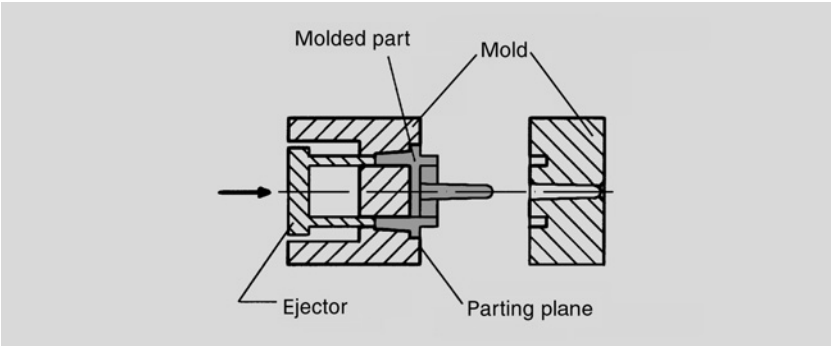

Figure 4-10 Mold and parting plane

manual removal

As soon as the mold has been opened, the article can be removed at the parting plane. In the simplest cases, this can be performed manually. However, the injection molding process is designed specifically for mass-producing articles at a fast rate and should ideally operate in fully automatic mode. It is therefore obvious, that manual removal takes too much time. Furthermore, the cycle time fluctuates as a result of the operator's intervention in the machine cycle. This can cause variations in the molding's quality. With thermoplastics, manual removal is used only in exceptional cases, where articles are delicate or of complex shape.

elastomers manual demolding

The situation is somewhat different for elastomers. On the one hand, the elasticity required in the application of molded rubber parts makes automatic removal within the injection molding cycle more difficult. On the other hand, there are certain complicated article geometries, which it would be impossible to produce profitably by the injection molding method, if it were not for the flexibility of these parts. Examples include bellows and elbows for hoses. It is therefore often impossible to avoid the manual removal of rubber moldings, even in large-scale production.

automatic ejection

Removal is generally performed by automatic ejectors, which are operated by the machine when the mold opens in the parting plane at the end of the injection molding cycle. These ejectors ensure, that the article is separated from the surrounding cavity in spite of undercuts, adhesive forces, and internal stresses which tend to retain the part within the cavity.

ejector type

A wide variety of ejector designs may be used. The choice depends on the shape of the article, its position within the mold, and the force retaining it. Figure 4-11 shows a pin system as an example of an ejector in an injection molding tool.

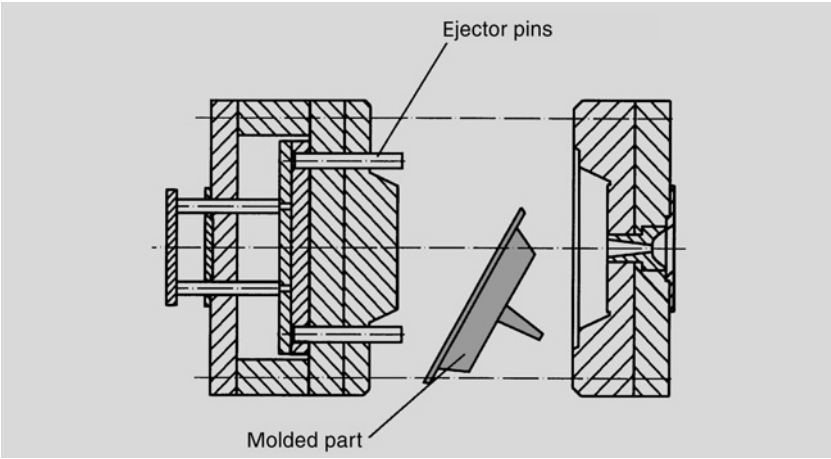

Figure 4-11 Demolding by ejector pins

ejector pins

Ejector pins often leave compression marks on the molded article. They should not be used on the visible part of the article, if this can be avoided. Another example of an ejector is the sleeve-ejector (Figure 4-12), which is able to transmit greater ejection force. Sleeve-ejectors are primarily employed with moldings, which are axially symmetrical.

sleeve-ejectors

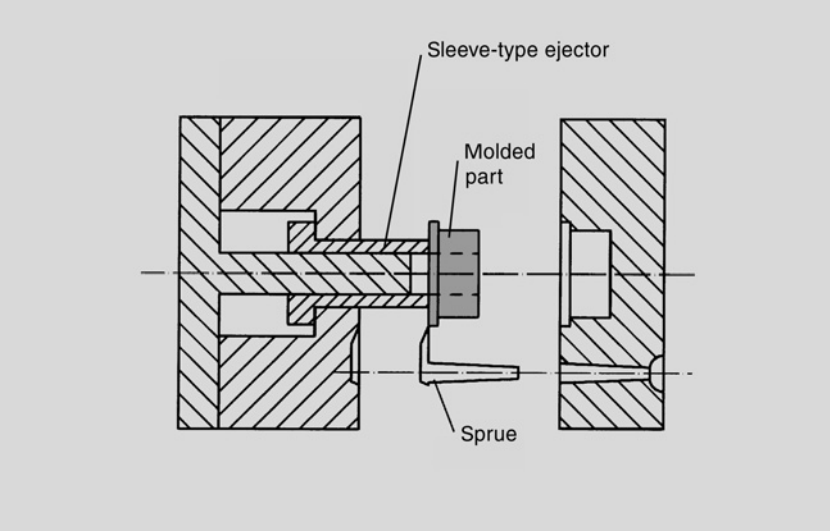

Figure 4-12 Demolding by sleeve-ejector or push-off bush

undercuts

If the molding possesses undercuts, it is often insufficient to merely provide the ejectors with a design suitable for trouble-free removal. In such cases, the mold must be designed with an additional parting plane, which also opens during demolding, releasing the undercut. Figure 4-13 shows an example, in this case a splits mold.

additional parting plane

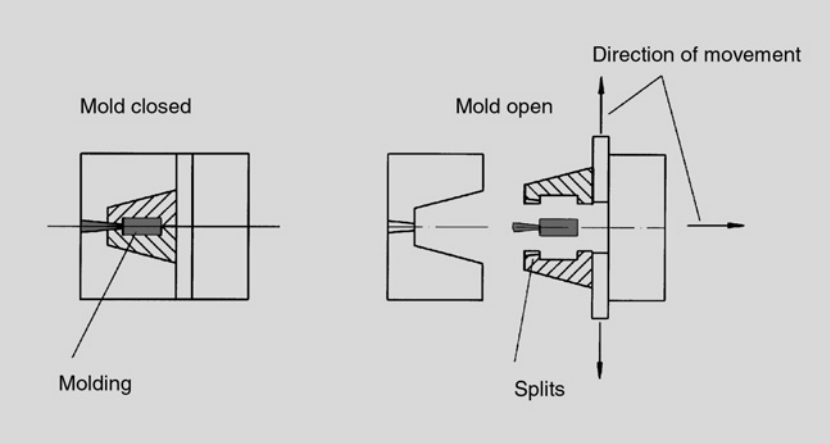

Figure 4-13 Splits mold

article conveyance

Where article specifications are not very demanding, the molding may drop onto a conveyor belt or into a receptacle, after ejection from the mold.

handling devices

positioning

Exact moldings with high-quality surfaces (e.g. car bumpers), must be removed with a handling device, in order to prevent damaging the article. Such handling devices include robots, for example. There is another advantage to using handling devices: when an additional finishing operation is required for the article, after the injection molding process. In that case, the gripper can immediately place the molding in the correct position for the finishing procedure. This saves time and effort, which would otherwise be wasted by additional sorting.

CD

The CD is an example of a very demanding part which must be removed by a handling device. If the CD were removed by simply allowing it to drop onto a conveyor belt by the force of gravity, it would probably be damaged so severely that it could no longer fulfill its intended function. Another benefit is, that the robot can transport the CD directly into the “sputtering” (metal coating) station.

Review Questions

No.	*Question*	*Choices*
1.	One feature of the mold is the _____.	screw cavity
2.	For the sprue gate, the sprue bore in the mold is _____.	cylindrical conical
3.	When a certain type of gate is used, the melt passes over a tight gap and into the mold. Because the width of this gap is sometimes only a few tenths of a millimeter, this type of gate is called a _____.	sprue gate film gate diaphragm gate pin gate
4	In order to mimimize the amount of waste, particularly when processing expensive materials, a _____ is used.	runner system sprue gate hotrunner
5.	The reduction in volume which occurs as the molded part solidifies is called _____.	warpage shrinkage
6.	The shrinkage of partially crystalline thermoplastics measures _____.	0.5–0.8% 1–2% 10–15%
7.	Sections of a molding, which differ in thickness, display different cooling rates. This results in _____.	warpage shrinkage
8.	Molds used in the processing of thermoplastics have a temperature _____ than the molding compound in the injection operation.	lower higher
9.	Molds used in the processing of thermosets and elastomers are _____.	heated cooled
10.	After the molded part has solidified in the mold, it must be _____.	homogenized removed
11.	Heat-balancing media include water and _____.	oil sodium
12.	The mold features a(n) _____, which allows the molded part to be removed from the mold at the end of the injection molding process.	undercut parting plane electric heating system
13.	Examples of ejectors used in injection molds include sleeve-type ejectors and _____.	handling devices ejector pins
14.	The CD is produced, employing a _____.	diaphragm gate pin gate

Lesson 5

The Clamping Unit

Key Questions

What types of clamping unit designs are there?
What are the advantages and disadvantages of using these designs?

Contents

5.1 Function and Structure
5.2 Mechanical Clamping Units
5.3 Hydraulic Clamping Units

Review Questions

Prerequisite Knowledge

The Injection Molding Machine (Lesson 2)
The Mold (Lesson 4)

5.1 Function and Structure

When you have worked through this lesson, you will be familiar with various clamping unit designs and the advantages and disadvantages of their use.

As a reminder, we will once again explain what happens to the molding compound in the course of the injection molding cycle.

injection operation

The molding compound, which has been homogenized and melted in the plasticating and injection unit, is injected into the mold cavity in the injection operation. There the molding compound solidifies to form the finished molded part. As soon as the molded part has solidified, it is removed from the mold by opening the mold at the parting line.

tasks of the mold

The actual formation of the molded part thus takes place within the mold. The mold itself is therefore subject to demanding requirements, which must be fulfilled by its various component parts.

open and close tightly

But there are even more tasks for the mold. It must close tightly during the injection phase so that the melt flows only into the cavity and not into the parting plane. At the same time, however, it must be possible to open the mold so that the molded part can be removed from the cavity at the end of the injection molding cycle.

quick and precise movement

Because the injection molding process is intended for the manufacture of many parts within a short time, the movement of the mold should be as rapid as possible, but with great precision.

The clamping unit is responsible for carrying out the tasks ‘opening and closing tightly’, as well as ‘rapid and precise movement’.

fixed platen
movable platen

The clamping unit consists of one fixed platen and one movable platen. One mold half each is installed on one of the platens.

arrangement

Depending on the design of the injection molding machine, the clamping unit may be arranged horizontally or vertically. In thermoplastics processing, the clamping unit usually lies horizontally so that the molded parts and any sprue remains can drop out of the mold. Figure 5.1 shows a mechanical clamping unit. The platen in the middle of the drawing can be displaced for a certain distance by a suitable drive mechanism.

drive

To perform the mold movements, the clamping unit needs a drive mechanism. Two fundamentally different systems are used as drives. There is thus a basic distinction between mechanical clamping units and hydraulic clamping units.

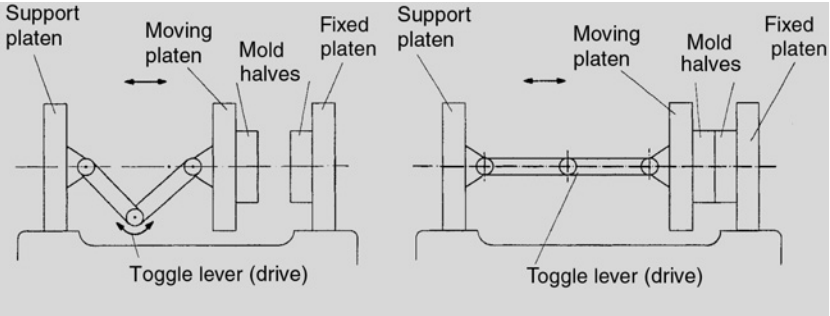

Figure 5-1 Schematic diagram of a clamping unit: (left) mold open, (right) mold closed

5.2 Mechanical Clamping Units

principle

In principle, a clamping unit can be regarded as a press. Presses have long been used for various purposes (e.g., obtaining oil from seeds, wine from grapes, printing, minting coins). The clamping force was once applied to a press of this type by turning a spindle. This principle can also be used in injection molding machines, but this use is now restricted to exceptional cases. Figure 5-2 shows the schematic diagram of such a spindle press.

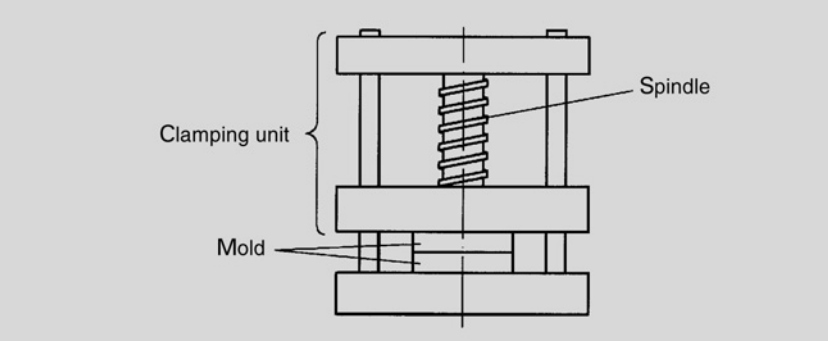

Figure 5-2 Press

toggle lever

The toggle lever clamping unit is now the predominant mechanical system for injection molding machines. It is not a purely mechanical system in the strictest sense, because hydraulics are also used for the movement of the toggle lever in this system. In principle, however, it is a mechanical system.

advantages

As the name suggests, the toggle lever clamping unit is based on the use of levers. Levers offer two great advantages:

forces

- Using lever arms of different lengths makes it possible to move great loads by expending only small amounts of force (car jack principle).

velocity

- It is possible with a low speed on one side of the lever arm to attain a high speed on the other side.

Note that attainable speed and transmittable force exist in a direct, mutually dependent relationship. As transmittable force increases, speed decreases.

time

Both advantages of the lever are exploited with the toggle lever. Because it is desirable to consume as little time as possible in moving the machine components in the injection molding process, it is practical to move the clamping unit and mold as quickly as possible in the wide-open position. Conversely, the clamping unit should be moved slowly when the mold is almost closed. It is desirable to prevent the mold halves from colliding at a high speed.

forces

The opposite applies to the forces being transmitted. When the mold is wide open, it is only necessary to transmit enough force to displace the movable mold half. However, when the mold is closed, it is necessary to transmit a very large amount of force in order to hold the mold shut in opposition to the injection pressure. Both conditions can be fulfilled quite effectively with the toggle lever.

Figure 5-3 shows a toggle lever clamping unit: once in the closed position, and once in the opened position.

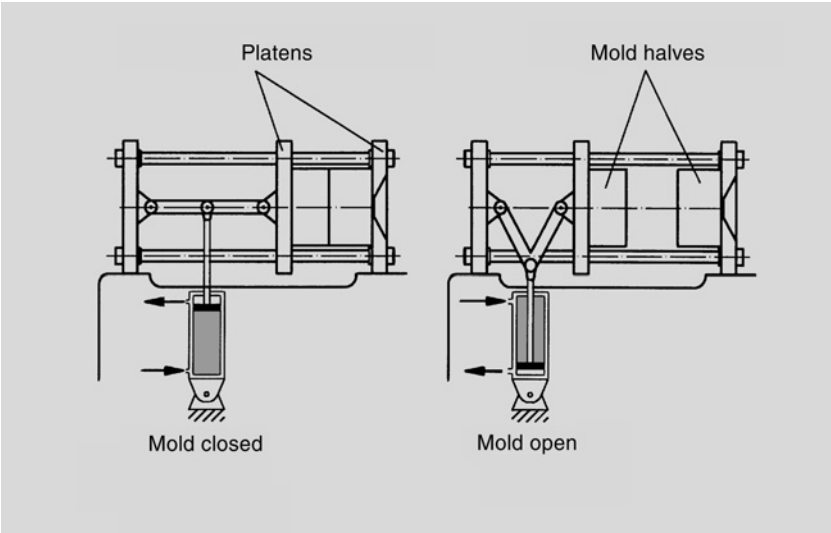

Figure 5-3 Operating principle of a toggle lever system

hydraulic piston

To move the lever, a comparatively small hydraulic piston is sufficient in all cases. Once the mold is closed and the lever has been fully extended, it is not necessary to apply any additional force with the hydraulic piston.

designs

There are various toggle lever designs. The choice depends on the clamping force to be applied and the speeds, at which the mold has to be moved.

Figure 5-4 shows a toggle lever clamping unit with a moving drive cylinder.

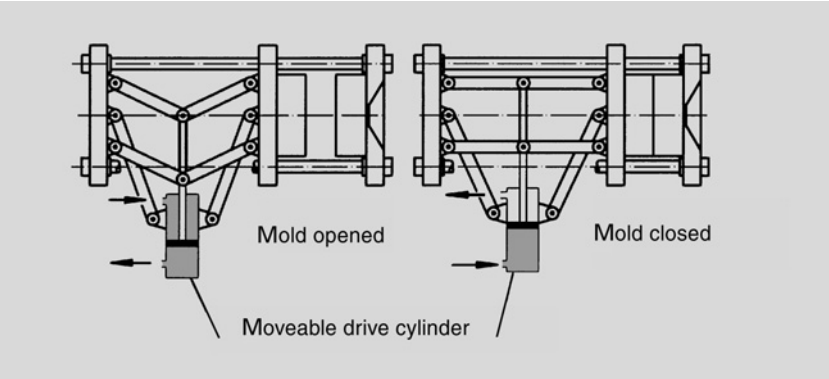

Figure 5-4 Example of toggle lever with moving drive cylinder

compensation for length

The many parts of a toggle lever clamping unit make it relatively expensive to construct. Optimum leverage – with great force at a low speed – is attained only within a narrow range. This system can function effectively as long as the mold is not changed and as long as the dimensions of the mold do not change (for example, as the mold becomes warmer during production). A high mechanical engineering effort is required to compensate for these unavoidable changes.

For this and other reasons, alternatives to the toggle lever clamping unit are in use. One example of such an alternative is the hydraulic clamping unit.

5.3 Hydraulic Clamping Units

hydraulic clamping unit

In the hydraulic clamping unit, a hydraulic ram is directly responsible for the movement of the mold and the application of the required clamping force. Figure 5-5 shows a hydraulic clamping unit. On the left side of the drawing, the hydraulic fluid forces the clamping ram out, thus closing the mold. On the right side of the drawing, the hydraulic ram is pushed in by the action of hydraulic fluid against the rod-end of the ram. The mold then opens.

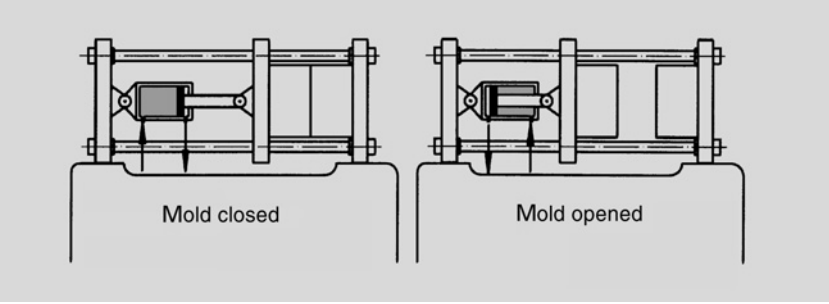

Figure 5-5 Hydraulic clamping unit

hydraulic fluid pressure

There are two main advantages of hydraulic clamping units. They can be adjusted very quickly to different mold dimensions, and they are not affected by temperature changes. While a lever is only capable of applying maximum force when it is completely extended, a hydraulic ram can transmit force at any desired point along its displacement by applying hydraulic fluid under the appropriate amount of pressure.

The force which can be transmitted with a hydraulic ram is a product of the hydraulic fluid pressure and the area acted upon by this pressure.

For practical reasons, the hydraulic fluid pressure in an injection molding machine is currently limited to 200 to 250 bar (2900–3600 psi). Therefore, the strong forces required to hold the mold shut are best attained by applying the pressure across a large area.

pump

accumulator

This involves some disadvantages for the construction of a hydraulic clamping unit, however. A large quantity of hydraulic fluid is required to fill a cylinder with a large area in situations where the ram is designed with a long displacement path. The obvious reason for this is that the mold must be opened wide. For example, it may be necessary to provide room for a handling device to be inserted between the mold platens. This requires a large accumulator and a powerful pump.

displacing cylinder

clamping cylinder

However, the large area of the ram is needed only when a clamping force must be applied. Small amounts of force are sufficient to move the mold. Therefore, a small cylinder for carrying out the travel movement is usually combined with a large clamping cylinder. A clamping unit which operates in this manner is shown in Figure 5-6.

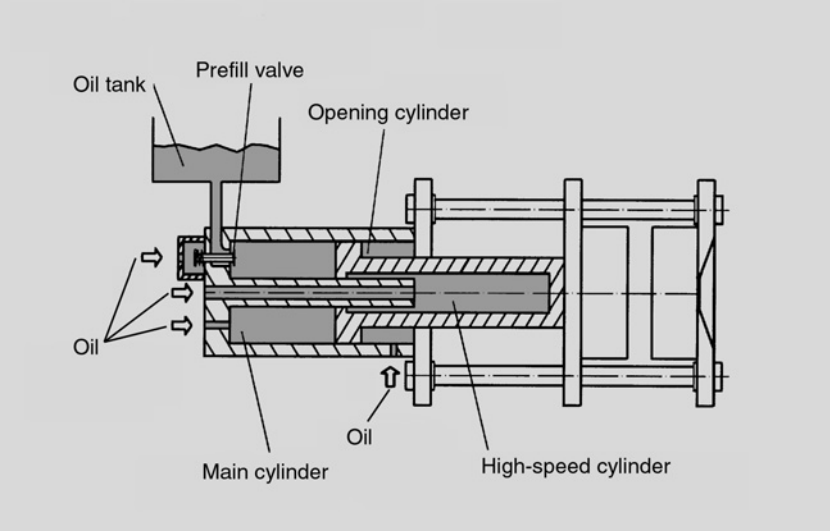

Figure 5-6 Hydraulic clamping unit with travel- and clamping cylinder

The small area of the high-speed cylinder transmits high travel speeds to be achieved, despite the relatively small size of the pump. The clamping force is then applied by the main cylinder.

combined designs

Besides the two main types of clamping units (mechanical and hydraulic), there are also combinations of both systems. All systems have advantages and disadvantages. In other words, there is no universal optimum design of clamping unit. The choice of system employed in the injection molding of plastics articles is ultimately determined by the the most cost-effective production method, e.g. single- or multi cavity mold and machine suitability.

CD

In CD production for example, toggle lever and fully hydraulic machines can sometimes be found side by side.

Review Questions

No.	*Question*	*Choices*
1.	Fundamentally different systems are used as drives for clamping units. A distinction is made between mechanical and _____ clamping units.	hydraulic movable
2.	The _____ is the predominant mechanical system.	spindle press toggle lever clamping unit
3.	In the toggle lever clamping unit, the mold halves collide at a _____ speed.	high low
4.	In a hydraulic clamping unit, a _____ is directly responsible for the movement of the mold and the application of the required clamping force.	toggle lever hydraulic ram
5.	The force which can be transmitted with a hydraulic ram is a product of the pressure and the _____ which is acted upon by this pressure.	displacement area
6.	Small amounts of force are sufficient to move the mold in a hydraulic system. Therefore, these systems usually combine a displacing cylinder with a (I) _____ area and a clamping cylinder with a (II) _____ area.	large small
7.	A hydraulic pressure of 250 bar (3600 psi) and a ram diameter of 500 mm (19.7 in) produce a clamping force of _____ kN, _____ t.	kN t 2300 260 4900 550 9800 1100

Lesson 6

Drive System and Controls

Key Questions

What tasks are carried out by the drive system and the controls?
Which major modules do these systems consist of?

Contents

6.1 Drive System
6.2 Controls

Review Questions

Prerequisite Knowledge

The Injection Molding Machine (Lesson 2)
The Plasticating and Injection Unit (Lesson 3)
The Clamping Unit (Lesson 5)

6.1 Drive System

movements

In previous Lessons, we showed the path taken through the injection molding machine by the plastics material/melt, on its way to becoming a molded article. We have shown, that this requires the machine to execute many different movements, such as:

- Rotation of the screw
- Axial displacement of the screw
- Moving the injection unit up against the mold's sprue-bush, as well as moving it away again (sprue-break or complete retraction)
- Mold closing and opening
- Ejector movements

Two types of drive are employed for these movements: one is of the hydraulic and the other one of the electric kind. It is usual for both to be employed in a machine.

6.1.1 Hydraulic Drive

It has been shown with the example of the hydraulic clamping unit, how hydraulic modules are employed to execute the mold movements.

linear movement
circular motion

Nowadays, both linear and circular motions (rotational movement) can be executed hydraulically. In that case pistons (rams) or hydraulic motors are employed. Rams allow linear motions to be performed, while hydraulic motors convert the pressure of the hydraulic oil into rotational movement (see Figure 6-1).

Hydraulic drive elements like these are also the driving forces on injection molding machines. Figure 6-2 shows how the movement of a hydraulic ram moves the toggle lever clamping unit of an injection molding machine.

pump
storage tank

To drive the hydraulic elements, the hydraulic oil pressurizes these elements. A pump, fed with hydraulic oil from a storage tank, is employed for that purpose.

flexible hoses

Of course, the individual components of the hydraulic system must be interconnected by flexible hoses as well as fixed pipelines.

hydraulic fluid

Why is hydraulic fluid referred to as 'hydraulic' (hydro = water)? The reason is, that earlier hydraulic drives were designed to use water. However, special hydraulic oils are now used almost universally.

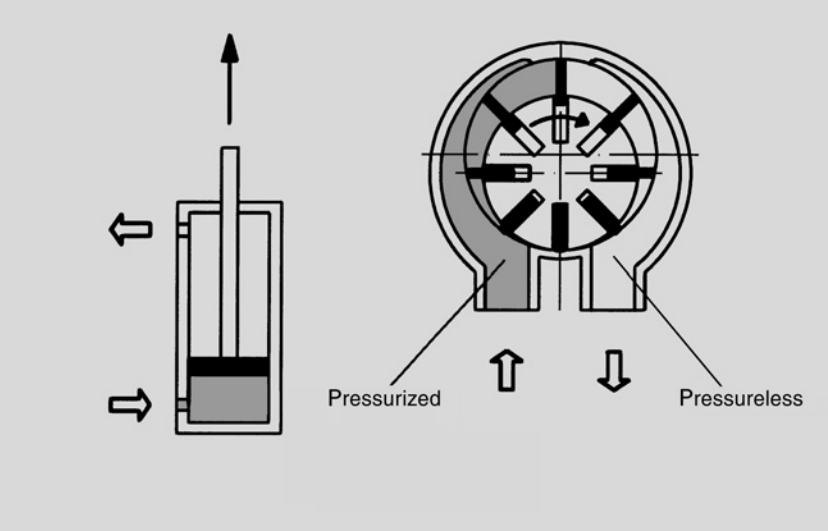

Figure 6-1 Movement of a piston and a hydraulic motor

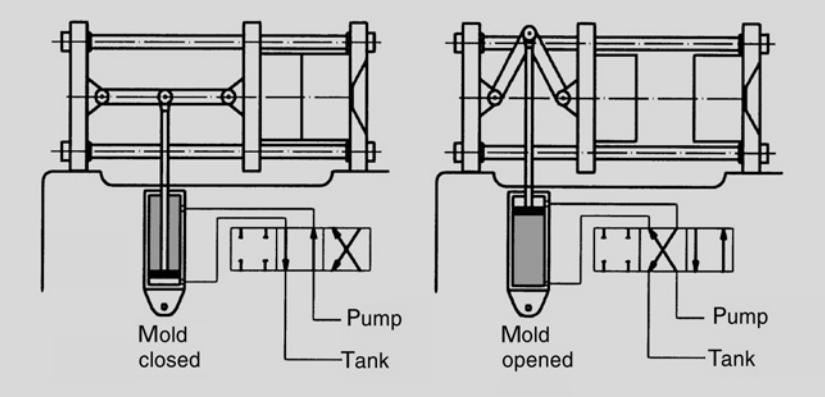

Figure 6-2 Schematic diagram of a clamping unit, with the hydraulics highlighted (left: mold closed; right: mold opened)

symbols

The movements of hydraulic components are controlled by valves. With hydraulic rams, directional valves supply pressurized hydraulic oil to one or the other side of the piston, so that this moves in the desired direction.

So as to simplify the representation of valves and other hydraulic components, symbols are used in diagrams (see Figure 6-3).

Figure 6-4 shows a '3/2-way directional valve,' with three ports and two switching positions.

check valve

For example, a check valve allows the hydraulic oil to flow in one direction only. A predefined amount of pressure must be applied in order to overcome the blocking function of the valve.

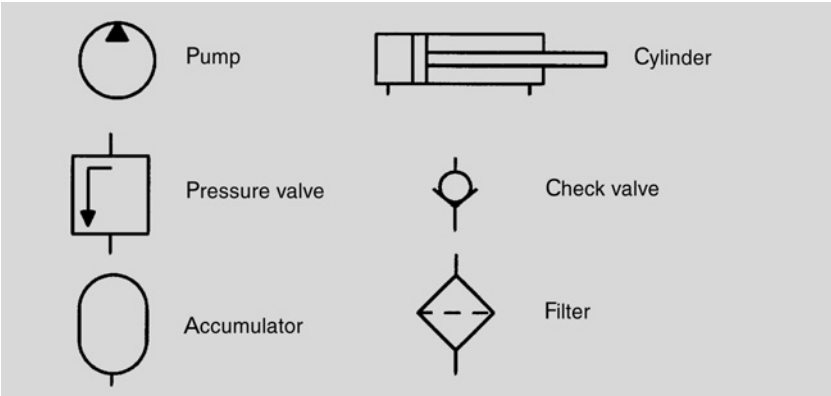

Figure 6-3 Symbols used for components of hydraulic systems

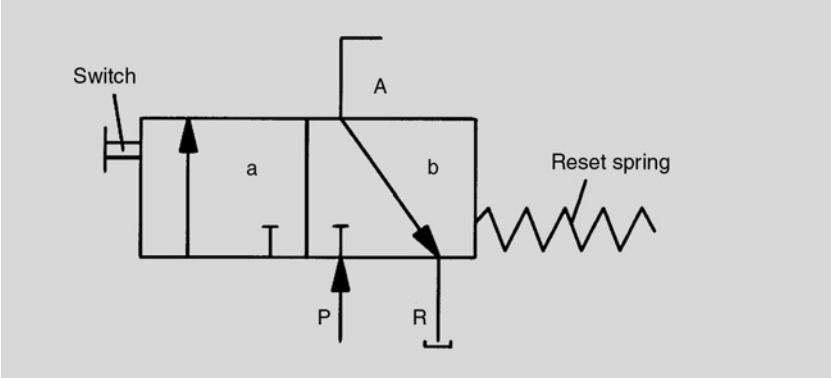

Figure 6-4 3/2-way directional valve

P: pressure line a,b: the valve's switching positions
R: return tank line A: drive

solenoid

Most valves are operated by an electromagnet. Figure 6-5 shows a simple valve of this type. When the solenoid is energized, it moves the valve into position 'a,' and the oil can pass through the valve. As soon as the solenoid is de-energized, the reset spring pushes the valve into position 'b,' and the oil's path is blocked, stopping it from passing.

The commands for operating the solenoids are issued by the injection molding machine's control system.

Apart from the simple valves described here, there are other designs, for controlling or regulating the oil flow rates, for example (servo valves, proportional valves).

6.1.2 Electric Drives

hybrid drives

In recent years, electric drives (hybrid drives) have increasingly been employed for individual movements in injection molding machines.

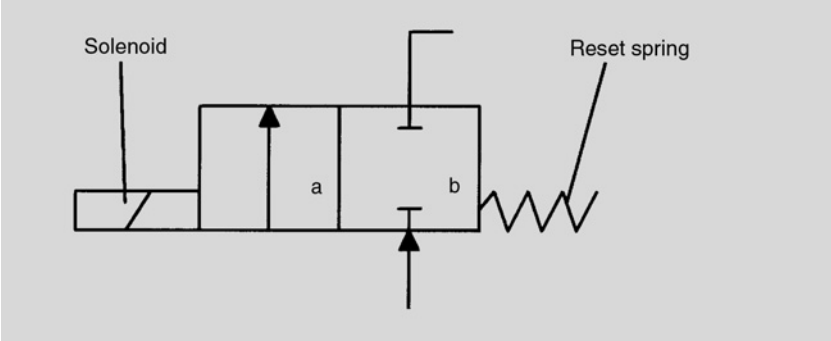

Figure 6-5 Spring reset solenoid-valve

fully electric drives

Completely electrically driven (fully electric) injection molding machines are also being employed.

Electric drives can carry out linear as well as circular movements. The latter are derived directly from the rotation of the electric motors. Linear movements are achieved with the aid of racks and pinions, crank drives or recirculating ball spindles, as well as linear motors.

Compared to hydraulic drives, electric drives have the advantage of lower energy consumption and lower noise levels. They also require less maintenance, as they operate without a centralized hydraulic system. On the other hand, hydraulic drives cost less.

6.2 Controls

control cabinet

The control and regulatory unit of the machine is usually housed in a separate control cabinet alongside the machine. In addition to the display instruments, the control cabinet also contains the electrical and electronic circuit elements and controls.

limit switches

On older machines it is customary for the desired machine parameters to be set with limit switches located directly on the major modules or by push buttons on the control cabinet.

set-value input keyboard and display screen
PC

On modern injection molding machines, the keyboard and display screen have become the preferred devices for inputting and monitoring of set-values. With CNC-controlled machines, the heart of modern open-as well as closed-loop control is the microcomputer or a PC (Personal Computer). Apart from open-loop- and feedback-control of the injection molding process sequences, these computers are also capable of monitoring and saving data.

interfaces
PDA
CAQ

Computer controls of this type employ interfaces, that enable them to exchange information for the production data acquisition (PDA), for instance, or quality data management (CAQ), handling devices or heat-balancing data. They can also enable hardcopy of production data to be printed.

Review Questions

No.	*Question*	*Choices*
1.	_____ components are used to execute the mold movements in most cases.	pneumatic hydraulic electrical
2.	Both linear and circular motions can be executed with the help of hydraulics. To this end, rams are used to produce linear motion, and _____ are used to produce circular motion.	hydraulic motors valves switches
3.	A _____ is needed to convey the hydraulic fluid.	screw pump
4.	The movements of the actuated hydraulic components are controlled with the help of _____.	electric motors valves
5.	The heart of a modern machine control and regulatory system is the _____. In addition to controlling and regulating the sequence of events in the injection molding process, this device can also monitor production data and store information.	control cabinet microcomputer display screen
6.	Identify the following hydraulic components: _____	cylinder pressure valve accumulator screw check valve

Lesson 7

The Injection Molding Process

Key Questions

What functions are performed by the main structural units in the individual process phases?
What are the phases into which the injection molding process can be divided?
What machine movements are associated with the individual process phases?

Contents

7.1 Phases of an Injection Molding Cycle
7.2 Start
7.3 Injection Phase
7.4 Holding Pressure Phase
7.5 Cooling Phase
7.6 Feed Phase
7.7 Removal from the Mold

Review Questions

Prerequisite Knowledge

The Injection Molding Machine (Lesson 2)
The Plasticating and Injection Unit (Lesson 3)
The Mold (Lesson 4)
The Clamping Unit (Lesson 5)
Drive System and Controls (Lesson 6)

7.1 Phases of an Injection Molding Cycle

phases (stages)

This lesson introduces the injection molding process in all of its phases (stages): injection phase, holding pressure phase, cooling phase, feed phase, and removal. The lesson also describes the machine motions associated with these process phases. In processing elastomers and thermosets, the cooling phase – as it applies to the processing of thermoplastics – is replaced by a heating phase.

Lessons 2 through 6 introduced the components of an injection molding machine with which the material is formed from the pelletized raw material into the finished injection-molded part.

structural units

To manufacture an injection-molded part, the machine's structural units must work together in a practical manner. This cooperation between the units results in the injection molding process during which the molded part is formed.

injection molding cycle

The injection molding process consists of individual phases or stages which follow one another, overlapping to some extent, and are continuously repeated. We refer to a process of this type as a cycle and therefore speak of a repeating injection molding cycle. Nowadays, it is customary for the injection molding cycle to proceed automatically from phase to phase.

automatic repetition

In most cases the cycle also repeats itself automatically. Only under certain conditions or for special molded parts may it be necessary for the machine to stop at the end of a cycle. After manual intervention by the machine operator, the machine is prepared for the next cycle and then restarted. This is done with molded elastomer parts, for example, which generally must be removed by hand.

CD

The CD is produced by a fully automatic method, for example. In this case the machine operator intervenes only when problems arise.

Figure 7-1 shows the various phases of an injection molding cycle and their sequence.

CD injection molding cycle

The various times making-up an injection molding cycle are shown with the example of a CD:

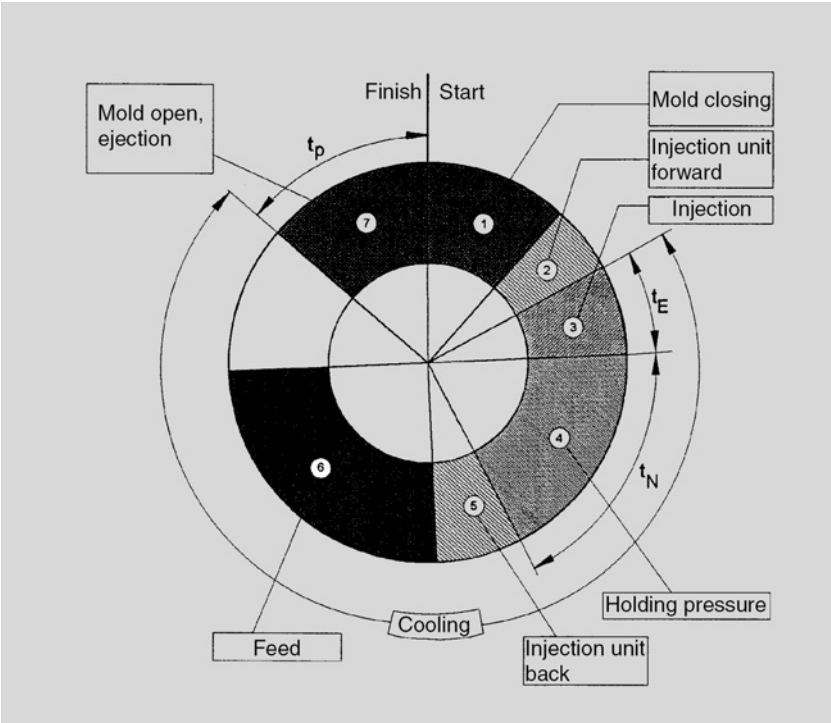

Figure 7-1 Injection molding cycle for thermoplastics

Phase	*Time [s]*
Mold closing	0.4
Injection	0.3
Holding pressure	0.3
Remaining cooling time	2.1
Mold opening	0.4
Handling (plus sprue punch-off)	0.4
Total cycle time	3.9

Due to its short cycle time, the CD is counted amongst fast cycling articles, similar to those produced for the packaging industry (e.g. cups). However, cycle times of other moldings may take from half- to several minutes. This depends on many influencing factors, such as article volume, material, gating design and demolding possibilities, amongst others.

The way the article is actually being molded cannot be observed directly. However, the machine's structural units can provide clues to the phase of the injection molding cycle the machine is currently executing.

Therefore, parallel to the description of the injection molding cycle phases, as seen from the material aspect, an explanation will also show, in which form the machine's structural units are involved.

7.2 Start

machine

To start molding production, all machine modules must be in their respective home position. Figure 7-2 shows the machine and its components in the status which allows production to begin.

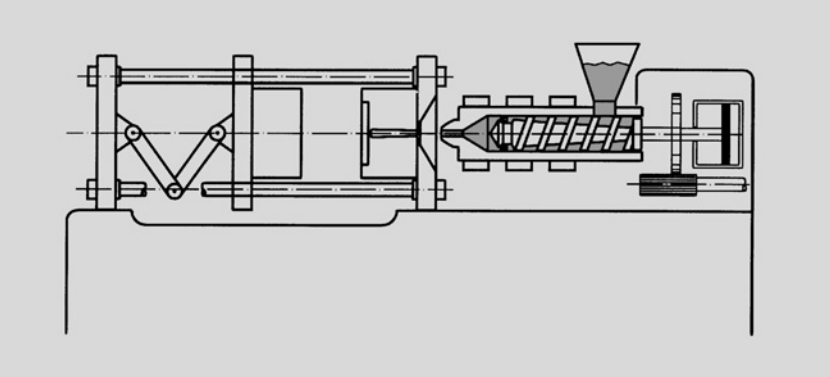

Figure 7-2 Injection molding machine and its structural units: home position

7.2.1 Mold and Clamping Unit

The clamping unit is open. There is no molded part in the cavity of the mold. The ejectors are in the retracted position. The mold has been adjusted to the prescribed temperature.

7.2.2 Plasticating Unit

screw and cylinder

The screw and cylinder of the plasticating unit have been heated to the prescribed temperature. The screw is in the retracted position. Plasticated, molten material is present in the injection chamber in front of the screw. The nozzle has been closed off so that no material can escape.

7.2.3 Controls

error message

If only one cycle is to be executed, the controls are in the semiautomatic mode. If a practically unlimited number of cycles are to be executed, the controls are in the fully-automatic mode. The machine operator must start the process by pressing a button. Usually the process will start only if all machine components are in their respective starting conditions. If this is not so, the controls issue an appropriate error message or automatically restore the components to their starting conditions.

7.2.4 Hydraulic- and Electrical Systems

In the subsequent text, only those machines will be discussed, whose major movement mechanisms (plastication, injection, mold opening/closing) are carried out hydraulically, because they are predominantly employed in the field. But it must also be stated, that fully electric or hybrid machines (with major movements carried out partly hydraulically, partly electrically) are gaining in importance increasingly.

operating temperature of the hydraulic oil

Of course, one precondition for the start of production is that the hydraulic and electrical systems of the machine must be switched on. Furthermore, the machine's hydraulic oil must be up to the set operating temperature.

material

The material, i.e. the molding compound, is present in the screw's antechamber as thoroughly mixed melt. In processing conventional thermoplastics (PS, PVC, PE), the material is at approximately 200–300°C (390–570°F). The material, from which CDs are produced, is heated to approximately 330°C (625°F). The consistency of the plastics melt is roughly comparable to that of honey.

Once the machine operator issues the starting signal, the injection molding cycle begins with the closing of the mold.

7.3 Injection Phase

machine

The machine's structural units move to the next operating status (Figure 7-3).

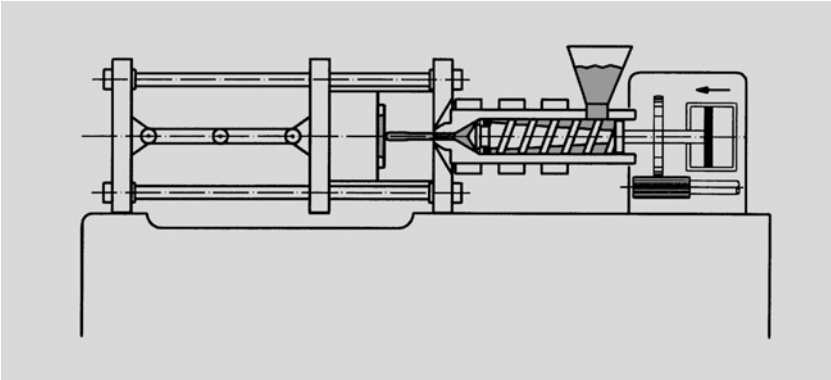

Figure 7-3 Injection molding machine and its structural units: injection phase

7.3.1 Mold and Clamping Unit

clamping force

The clamping unit moves the two halves of the mold together. A clamping force is built up, thus locking the mold tightly.

7.3.2 Plasticating Unit

The plasticating unit moves up to the mold's sprue bush. The nozzle is opened, and the material located in the screw's ante-chamber is injected into the mold by the forward movement of the screw.

non-return valve

As soon as the screw moves forward, pressure is exerted upon the non-return valve (checkring valve) on the screw-tip by the material in the ante-chamber. As a result, the check ring of the non-return valve is pushed back onto its seat, thus stopping any melt escaping rearward over the screw flights. The screw now functions as a plunger during the injection process (see Figure 7-4).

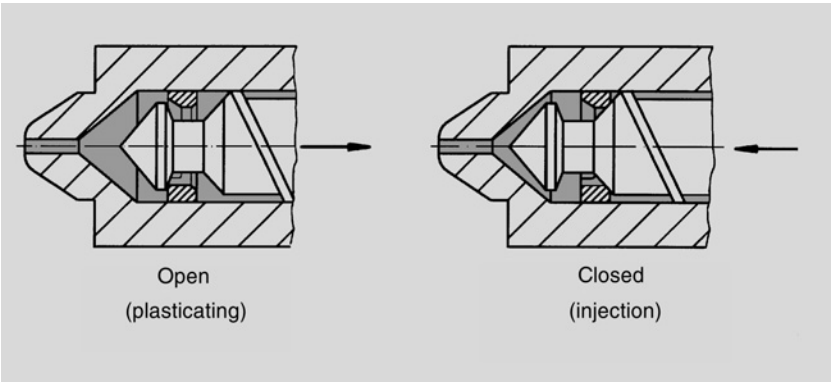

Figure 7-4 Screw, cylinder and non-return (checkring-) valve

7.3.3 Controls

The controls must ensure that the structural unit movements are coordinated, while proceeding at the intended speeds and pressures. This places high demands on the precision of the controls.

7.3.4 Hydraulics

peak power

The hydraulic system must exert its highest power-output during the injection phase. Besides maintaining the clamping force, the hydraulic system must also be able to inject the plastics melt into the cavity at high, but precise, speed. To accomplish this, the hydraulic system must overcome the resistance offered by nozzle and mold.

material
shut-off nozzle

At the start of the injection process, the molten, homogenized material is poised in the injection chamber. The nozzle is closed, so that no material can escape. As soon as the plasticating unit has been moved against the mold's sprue bush, the nozzle can be opened to allow the melt free passage into the mold.

cavity

At the same time, the hydraulic system exerts pressure on the screw, which moves in an axial direction, i.e. forward towards the nozzle. The material is thus forced out of the screw's ante-chamber and pushed into the mold cavity.

cooling

The fluid, molten material must resolidify within that cavity, so that the finished article can be removed later. Therefore, molds employed for thermoplastics are cooled or heat-balanced, in order to dissipate the heat introduced into the material during the melting process, thus allowing it to solidify.

speed

As soon as the melt contacts the mold during the injection operation, it begins to cool and solidify. Therefore, injection must occur quickly so that the cavity is filled while the compound is still fluid.

pressure

This requires very high pressure, because the melt is merely viscous, despite the high temperatures used. The melt flow must overcome the resistance offered by the nozzle, sprue, and cavity, as well as some other obstacles, such as wall friction. The pressure in front of the screw may therefore exceed 2000 bar (29,000 psi) in the injection operation.

clamping force

The resistance in the nozzle, sprue, and cavity causes this injection pressure to decrease gradually in the direction of flow. In spite of this, high pressures also occur within the mold. The clamping unit must be capable of holding the mold tightly shut against these pressures.

pressure curve

Figure 7-5 shows the pressure-curve inside the mold, in front of the screw, and in the machine's hydraulic system. It can be seen that the pressure inside the mold reaches its maximum value, when sufficient melt has been injected to completely fill all cavities.

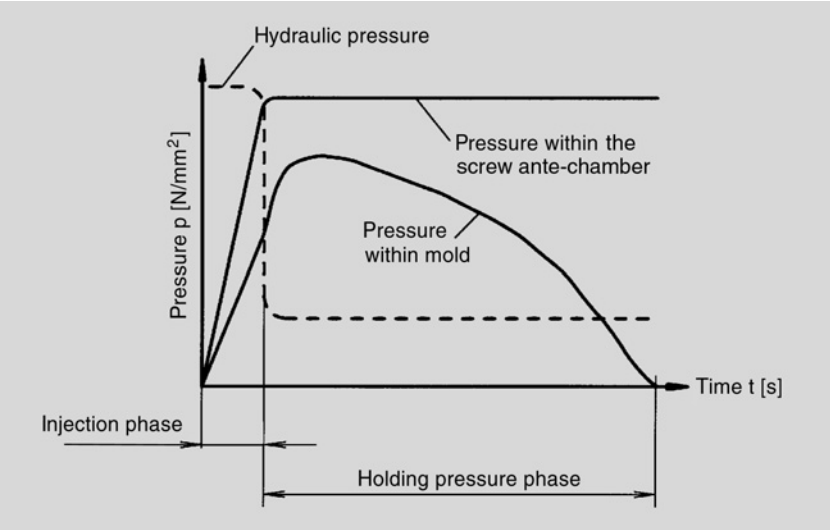

Figure 7-5 Pressure profiles within the mold

hydraulic pressure

The pressure in the hydraulic system is actually much lower than that shown in Figure 7-5. The reason is, that this pressure is intensified to a higher value by the hydraulic ram's projected area (see Figure 7-2). The hydraulic pressure acting on the hydraulic ram's large projected area transmits a great amount of force to the screw's "ram" tip. This force produces the high pressure within the injection chamber. The most critical point of the injection phase has now been reached. Most of the molding compound is still in a fluid state, so almost all of the pressure applied by the screw can be transmitted to the mold. If the injection pressure were maintained beyond this point, the resulting pressure within the mold could be great enough to overcome the clamping force. The mold would be forced apart in the parting plane, allowing melt to escape from the cavity.

critical point

flashing
overpacking
damage

This can have serious consequences. Flash forms on the molding, which will require finishing work, or the article may even have to be rejected. The consequences for the mold or the machine can be considerably more critical. The high forces applied can result in serious damage to mold or clamping unit.

pressure change-over

It is therefore critical, that the injection pressure is switched off at the right moment. If this occurs too soon, it will result in the production of incompletely filled parts. Change-over to holding pressure asks for particularly high precision of the machine's control and hydraulic systems.

7.4 Holding Pressure Phase

material shrinkage

As soon as the plastics melt fills the mold, it begins to cool. This cooling process begins at the mold wall and proceeds toward the center. For a certain period, the melt remains fluid inside the molding. As it cools, the molding material decreases in volume; in other words, it 'shrinks.'

CD

If the pressure were completely switched off after the injection phase, the molding would detach itself from the wall as it cools. There would no longer be any control over the molding's dimensions. It is easy to imagine the consequences in the example of the CD: the surface would become uneven, the scanning by laser would become less reliable – in short, the CD would be utterly useless.

sprue position

This can be avoided. As long as the internal region of the molding remains in a fluid state, the pressure on the melt is maintained. Supplemental fresh material is forced into the mold in sufficient quantity to compensate for shrinkage. Of course, this works only as long as the sprue's inside remains soft enough. That is one reason, why the sprue should be positioned at the thickest point of the molding, if possible. Besides this, it should also be dimensioned accordingly.

sealing point

Holding pressure phase is the term for the phase in which just enough pressure is applied to compensate for shrinkage by the supplemental injection of material. This phase must last until the sprue has solidified – in other words, until no more melt can be supplementally forced into the molding. That event is known as 'sealing point'.

ideal pressure curve

In contrast to the injection phase, no flow resistance must be overcome in the holding pressure phase. Furthermore, practically no movement of material occurs in this phase. For these reasons, the holding pressure can generally be set to a lower level than the injection pressure.

It is important to set the pressure to the proper level. If the holding pressure is too low, or if the holding pressure period is too short, this would result in the production of a defective molding. The ideal curve for the mold cavity pressure is shown in Figure 7-6.

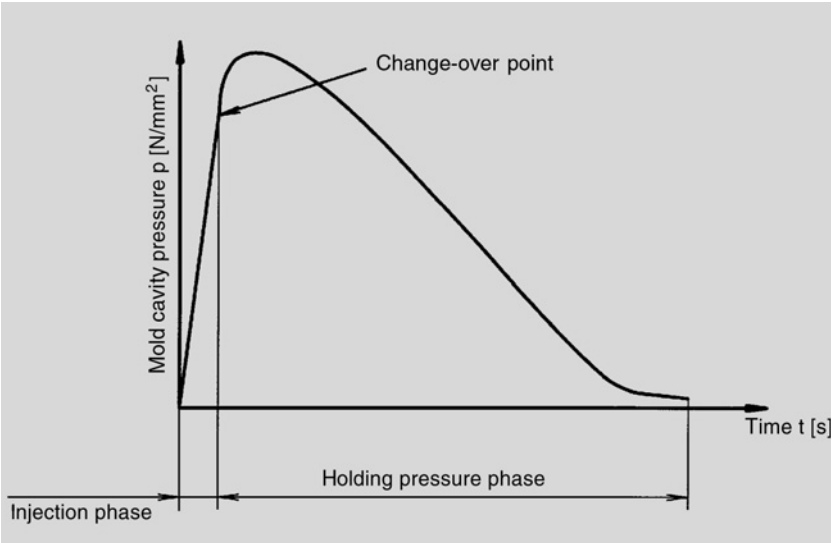

Figure 7-6 Ideal mold cavity pressure profile

For the injection molding machine setter, internal mold pressure curves of this type are an invaluable aid for finding the optimum times and pressures for the injection- and holding pressure-phases. This kind of graph enables one to find much data regarding the quality of production run and moldings alike.

It is especially important for the transition from injection- to holding-pressure phase to occur at the precise moment. Figure 7-7 shows a few examples of wrong mold cavity pressure curves. If transition occurs too early, a pressure drop results. This entails the risk that it will be impossible to completely fill the cavity. If transition occurs too late, a pressure spike occurs. In the long run, such pressure spikes can result in damage to mold and machine.

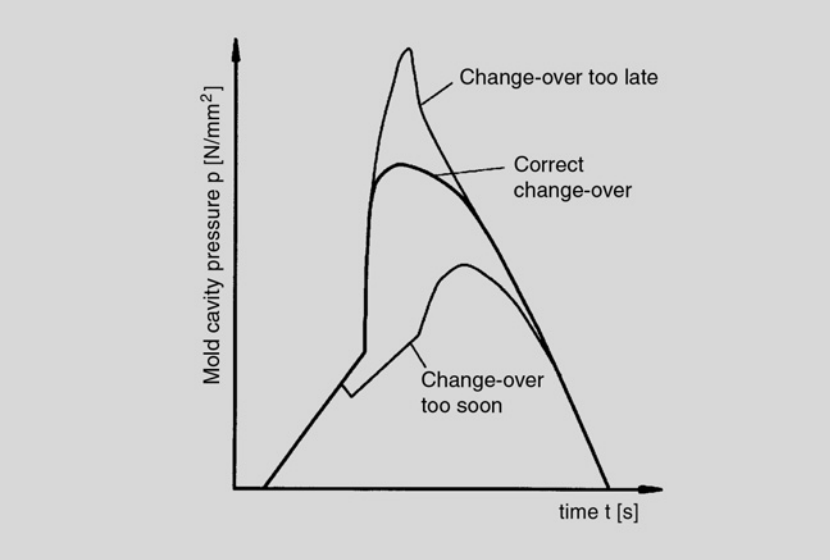

Figure 7-7 Wrong mold cavity pressure curves

machine

The following status applies to the machine's modular structural units during the holding pressure phase:

7.4.1 Mold and Clamping Unit

The clamping unit is closed, in the same way, as during the injection phase. The mold halves are pressed tightly together by clamping force. Some of the clamping force is offset by the mold parting force. This is generated by the injection pressure, acting on the mold's internal projected area.

7.4.2 Plasticating Unit

compensation for shrinkage

The plasticating unit is moved toward the mold. The nozzle is opened and the screw is subjected to pressure. The purpose of this pressure is to force molten material from the screw ante-chamber and into the cavity till this is filled, then to apply holding pressure, to compensate for shrinkage of the molding, until the sprue has solidified.

melt cushion

It is important, to take a closer look at the position of the screw in the holding pressure phase. At the start of the holding pressure phase, the cavity has already been filled with most of the melt, that it is meant to receive. A small quantity is subsequently injected to compensate for shrinkage. But even at the end of the holding pressure phase, some residual material should still be in the injection chamber. This 'melt cushion' enables pressure to be transmitted between the screw and the cavity or sprue. This melt cushion is absorbed in the next shot.

7.4.3 Controls

holding pressure stages

During the holding pressure phase, the machine controls must ensure that the hydraulic pressure, which moves the screw, remains at the prescribed level. This will allow the supplemental injection of just enough material into the cavity to compensate for the shrinkage of the molded part. For this purpose, most machines offer the option of running a sequence of different stages of holding pressure levels. These stages are adapted to the geometry of the molded part.

7.4.4 Hydraulics

change-over

The hydraulic pressure is at a lower level during the holding pressure phase than the injection phase. The change-over from injection phase to holding pressure phase is critical, as far as the hydraulic system is concerned. The 'injection' mode is characterized by high screw speeds and high pressure, while the 'holding pressure' mode is characterized by a very low screw speed and a relatively low hydraulic pressure. The transition from the former mode to the latter must be performed with extreme precision and within the shortest possible time. This demands high precision of the switching operations.

The injection and holding pressure phases are followed by two other phases, which proceed concurrently:

7.4.5 Cooling Phase

warpage

The material is now in the cavity of the mold. It has reached the cavity in a flowable state and must now solidify under the influence of the relatively low mold temperature. This will allow the finished molded part to be removed. The solidification of the molded part must occur under controlled conditions so that no undesirable stresses develop within the molded part. These stresses would warp the molded part.

7.4.6 Feed Phase

feed phase

The sprue on the molded part has solidified, thus preventing any further injection of supplemental molding compound. The plasticating unit can thus fulfill its other tasks. New material can be prepared in readiness for the next cycle.

7.5 Cooling Phase

material

For the material within the mold cavity, the holding pressure phase is concluded as soon as the sprue solidifies – in other words, as soon as it is 'sealed.' From this point on, no more material can enter the cavity. During the injection and holding pressure phases, the material in the cavity has already begun to cool against the relatively cold mold wall. The outer layers have soldified very quickly. The cooling time therefore starts as early as injection.

thermal conduction

Cooling takes longer in the middle of the molded part. The surplus heat of melt remaining there must be dissipated through the outer layers to the mold wall. Now it becomes apparent that plastics are poor conductors of heat. The thermal conductivity of plastics is approximately 100 times poorer than that of steel.

Heat transfer can be effectively defined with the help of mathematical equations. This makes it possible to perform advance calculations of the cooling time, during which the molded part must remain in the mold until it is sufficiently cooled.

cooling time

The cooling time also depends on for how long a period it is intended to cool the article within the mold. It is not necessary, to wait until the entire molding has cooled to mold temperature. It suffices, for the outer part of the molding to cool just enough, so that it can be removed from the mold in stable condition. It would also be ill-advised to allow the part to cool within the mold for longer than absolutely necessary. The reason is that the machine is essentially in a waiting mode during the cooling period and is therefore unproductive.

profitability

The choice of the proper cooling time is also especially important from the profitability aspect. Apart from the complicated equations for defining the cooling process – as applied in computer simulations of injection molding – there are also simple equations which make it possible to calculate cooling times with a pocket calculator or by hand.

7.5.1 Cooling Time Equation

cooling time equation

The cooling time equation has been derived at as a simple approximation for defining heat-transfer within the molding during the cooling process in the injection molding tool:

$$t_c = \frac{s^2}{\pi^2 \times a_{eff}} \times \ln\left(\frac{4}{\pi} \times \frac{T_m - T_w}{T_E - T_w}\right)$$

t_c[s] = cooling time to be calculated
s[mm] = article thickness
T_m[K] = melt temperature at the start of the injection process
T_w[K] = mold temperature
T_E[K] = demolding temperature (assumed temperature at the molding's center, at which it is to be removed)
a_{eff}[mm^2/s] = effective temperature conductivity (the molding compound's physical characteristics, which can be found in Tables, subject to the mold wall temperature)

The following equation can be employed for a rough calculation of the cooling time:

$$t_c = 2s^2$$

t_c[s] = cooling time
s[mm] = the article's wallthickness

The article's largest wallthickness is decisive, as it determines the cycle time.

According to this formula, a CD with a wall thickness of 1.14 mm (0.045 in) requires a cooling time of approximately 2.6 seconds. In this context, also refer to Chapter 8.3.3 "Thermal Mold Layout". (For wall thickness in inches, the formula for cooling time is $t_c = 2000\ s^2$.)

CD

7.5.2 Mold and Clamping Unit

The status of mold and clamping unit during the holding pressure phase is identical with the one of the cooling phase.

7.5.3 Plasticating Unit

During the cooling period, material is prepared in the plasticating unit for the next shot. A detailed description of the events which take place in the plasticating unit during this phase is given in the section titled 'feed phase.'

7.5.4 Control and Hydraulic Systems

Because the cooling phase represents a waiting phase for the machine, no actions need to be taken as far as hydraulics and controls are concerned during this phase. The events which take place during the concurrent feed phase are described in the 'feed phase' section.

7.6 Feed Phase

material

During the feed period – following the completion of the injection and holding pressure phases – material for a new shot must be prepared and provided in the proper quantity. The material is 'fed' or 'metered.'

hopper
material conveyance

To this end, the material in the hopper above the plasticating unit is drawn in by the rotating screw and conveyed along the screw flights in the direction of the nozzle. As it moves toward the nozzle, the material is exposed to many different stresses.

thermal conduction

Heat is transmitted to the material from the cylinder wall of the plasticating unit. This transfer of heat is called *thermal conduction*.

friction

The material is sheared by the rotation of the screw and further warmed by the resulting frictional heat. This effect is intensified by the fact that the height of the screw flights decreases in the direction of the nozzle. The material is thus being compressed increasingly. It is simultaneously mixed (homogenized) in a thorough manner. The pressure conditions in the space between the screw and the cylinder wall cause trapped air to be conveyed in the direction of the feed zone.

axial screw motion

The intense compression and mixing of the material is desirable for ensuring that its properties are as uniform as possible. By the time it reaches the tip of the screw, the material has become molten. It accumulates in front of the screw in the ante-chamber. As the screw can be moved in an axial direction, it yields to the pressure of the accumulating material and moves backward. In order to improve homogenization, this movement is restricted by adjustable resistance, known as back-pressure.

energy

screw speed
back pressure

In most cases, more energy is introduced into the material by friction than by the hot cylinder wall. Ultimately, this energy must be produced by the drive motor. Therefore, the amount of energy introduced is especially dependent on the screw speed and back pressure setting. The screw speed influences the time required to prepare the material.

cooling time
plasticating time

When the settings for the process are selected, it is important to make sure, that the plasticating time does not exceed the cooling time. The reason is, that the plasticating time can vary as a result of variations in material characteristics. If the plasticating time were longer than the cooling time, these variations would directly affect the cycle time, possibly causing the quality of the molding to vary as well. The following rule therefore applies:

rule

The plasticating time must not be allowed to determine the cycle time.

profitability

Furthermore, an optimum cooling time offers the advantage of greater profitability, since it allows more moldings to be produced, due to time-saving.

waiting period

The molding's cooling phase runs concurrently with the feed phase. As soon as the feed phase has ended, the material is available in the injection chamber for the next cycle. During the waiting period – while waiting for completion of the molding's cooling phase – a heat exchange occurs between the melt in the screw's ante-chamber and the cylinder wall. It is important to ensure, that during this waiting period the melt neither cools excessively nor absorbs too much heat and starts to decompose.

heat exchange

risk of decomposition

7.6.1 Mold and Clamping Unit

The mold and clamping unit are not involved in the plasticating operation.

7.6.2 Plasticating Unit

shut-off nozzle

The preparation of new material begins immediately after the completion of the holding pressure phase. If a shut-off nozzle is used, it will close as soon as the holding pressure phase has timed-out. In this case the plasticating unit will be retracted from the mold to avoid excessive heat-transfer from the hot nozzle to the cooler mold.

retractable plasticating unit

If no shut-off nozzle is used, the plasticating unit cannot be retracted until the feed phase has ended. Otherwise, the molding compound would escape from the nozzle prematurely.

plasticating process

During the plasticating process, the screw is rotated by a hydraulic motor. The material descends from the hopper and enters the feed zone. The rotation of the screw then conveys the material toward the screw tip and through the open non-return valve. The screw is forced backward by the material accumulating in the injection chamber (ante-chamber) in front of the screw tip. As soon as the introduced melt has pushed the screw back to trigger the adjustable feed stroke limit switch, screw rotation is stopped.

non-return valve
injection chamber

7.7 Removal from the Mold

As soon as the set cooling time in the injection molding cycle has expired – in other words, once the injection-molded article has solidifed within the mold – the mold opens in the parting plane. The mold halves separate far enough to allow the article to be ejected.

ejectors

Ejection is usually carried out by guided metal pins – 'ejectors' – that are part of the mold. These ejectors push the molding off the cavity surfaces. Here it is important to ensure, that the article is not damaged by the ejector pins.

handling device

Moldings of high quality and sensitivity (e.g. bumpers), as well as parts subjected to further processing immediately after removal, must not be allowed to just drop into a box or onto a conveyor belt. They should be removed from the mold by a handling device.

CD

All of these criteria apply also to the Compact Disks. CDs cannot be allowed to drop onto one another, because this would damage their highly sensitive surfaces. CDs are coated (sputtered) and lacquered in subsequent operations. A handling device is used to place the CDs into the machines used for these operations.

shrinkage

warpage

The ultimate geometry of the article produced does not develop, until it has been ejected from the mold. Besides shrinkage, which is associated with the process of cooling from the moldable state, warpage of the molded article also occurs. Warpage depends on the article's geometry. Warpage caused on a plug-in module by varying wallthickness is shown in Figure 7-8. Shrinkage and warping can partially be corrected by machine settings.

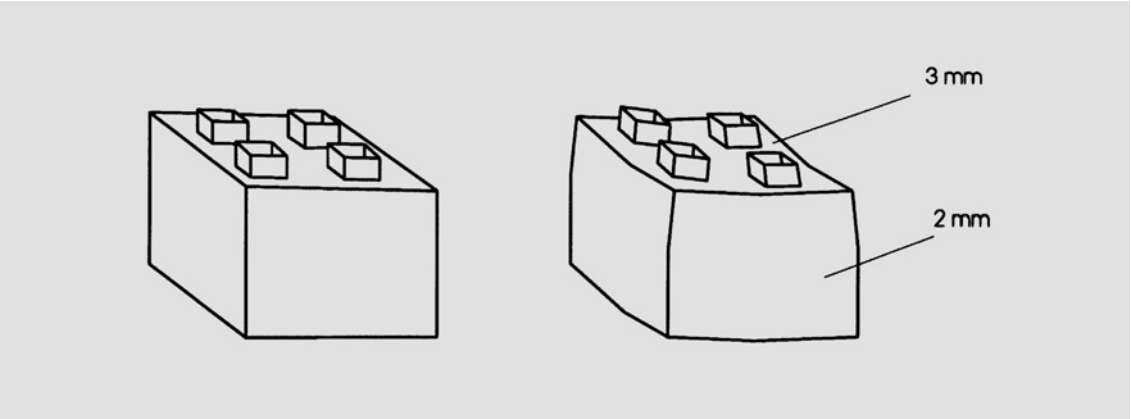

Figure 7-8 Warpage on a plug-in module

7.7.1 Mold and Clamping Unit

opening of mold
parting plane

Once the cooling time has expired, the mold is opened in the parting plane by the clamping side's moving platen. This carries the corresponding mold half with it and stops at its programmed open position. The molded article remains adhering to the moving platen's mold half, having separated from the mold half on the fixed platen (nozzle side). With the parting process, the mold halves must be moved far enough apart so that the molding can be ejected or removed without catching on the mold.

ejector pins

Ejection begins as soon as the clamping unit has opened the mold. For this purpose, ejector pins have been integrated in the mold's moving half. Moving relative to the mold, the pins are pushed forward by a machine-integrated hydraulic system, thus removing the molding(s) from that mold half. The ejected parts either drop into a collecting box, or they are removed by a handling device. In the latter case, the moldings are retained on the ejector pins for easy removal.

air ejectors

In most cases the article is removed mechanically by ejector pins, integrated into the mold. With sensitive or soft moldings, the pins are often replaced by air ejectors. Air ejectors separate and push the molding off the mold surface by compressed air.

CD

The Compact Disk is a very sensitive molding. It is released from the mold surface by compressed air and is then removed by a handling device equipped with soft suction cups. Although the CD is only 1.14 mm (0.045 in) thick, on some machines the mold must open fairly wide for allowing the handling unit to remove the CD.

manual removal

handling devices

In some individual cases of molding thermoplastics, but more frequently with elastomer processing, the finished article cannot be ejected automatically. The part must then be removed manually, because with elastomers, complex articles (as well as those with undercuts) are often produced from comparably simple molds, due to the material's stretchability and flexural properties. The removal of such parts is often so complicated, that – if at all – only the most highly specialized handling devices can be employed for automatic demolding. Therefore, manual removal still continues to be carried out in the elastomer processing industry even today.

After ejection of the moldings, the ejectors are retracted. Clamping unit and mold are then in the home position for a new cycle again.

7.7.2 Plasticating Unit

During the feed phase, the plasticating unit has readied the material for the next cycle. It has thus completed its task and is now in a waiting position.

7.7.3 Hydraulics and Controls

During the ejection operation the controls coordinate the sequence of movements performed by the clamping unit and ejector. The ejectors cannot be allowed to move too quickly because this might cause them to pierce the molding. The movement opening the mold in the parting plane should also start slowly to avoid damaging the molded article.

Once the cycle is completed, the control settings determine, whether the next cycle begins immediately (in fully automatic mode) or upon a signal from the machine operator (semiautomatic mode).

Review Questions

No.	*Question*	*Choices*
1.	The injection molding process can be divided into the following phases: injection, holding pressure, cooling, feed and _____.	locking removal
2.	The nozzle is _____ during the injection phase.	closed open
3.	The screw moves toward the _____ during the injection phase.	hopper nozzle
4.	Compensation for shrinkage occurs during the _____ phase.	injection holding pressure feed
5.	The point at which no more melt can be forced into the molded part is called the _____.	sealing point melting point
6.	The holding pressure is generally _____ than the injection pressure.	lower higher
7.	A _____ amount of material is conveyed into the cavity during the holding pressure phase.	large small
8.	The following equation provides a rough estimate of the cooling time: cooling time (in seconds) = 2 × wall thickness (in millimeters) _____.	×4 [squared]
9.	The cycle time _____ be determined by the plasticating time.	must must not
10.	The _____ phase runs concurrently with the feed phase.	injection cooling holding pressure
11.	The CD is very sensitive and must be removed _____ .	by hand by gravity by a handling device

Lesson 8

Mold Design

Key Questions

What are the functions of an injection mold?
What are the phases of the design process?
What is meant by mechanical, thermal and rheological mold layout?

Contents

8.1 Tasks and Specifications of Injection Molding Tools
8.2 The Designer's Tasks
8.3 Mold Layout

Review Questions

Prerequisite Knowledge

Basic Principles of Plastics (Lesson 1)
The Injection Molding Machine (Lesson 2)
The Mold (Lesson 4)
The Clamping Unit (Lesson 5)

8.1 Tasks and Specifications of Injection Molding Tools

An injection molding tool must fulfill several primary tasks, which in turn give rise to secondary tasks.

main tasks

Main tasks:

- Receiving the melt
- Distributing the melt
- Forming the molding
- Cooling the molding (heat-balancing)
- Demolding the article

secondary tasks

Secondary tasks:

- Absorption of forces
- Movement transmission
- Guidance of moving mold components (e.g. splits)

For example, as a secondary task, the mold must absorb great forces, in order to ensure, that the the primary task of receiving the melt injected into it under high pressure, is fulfilled.

function complexes

Several functions can be assigned to these tasks (Figure 8-1). The designer must ensure that these functions are performed by the mold. To this end, the designer can use computer-aided methods.

8.2 The Designer's Tasks

computer assistance

The described mold specifications clearly indicate the complexity of the designer's tasks. In his work, designers are assisted by numerous computerized aids. Computer-aided design has become fully established and widely accepted by now. This is not least due to the increased efficiency of affordable PCs and work stations.

CAD

For the geometrical layout of a mold, CAD (Computer Aided Design) systems are available nowadays, with which an injection molding tool cannot only be described by two-dimensional drawings, but also shown as a complete 3-D model. The latter is of particular interest for the description of the often complex, shape-giving mold contours. The input for producing such a model

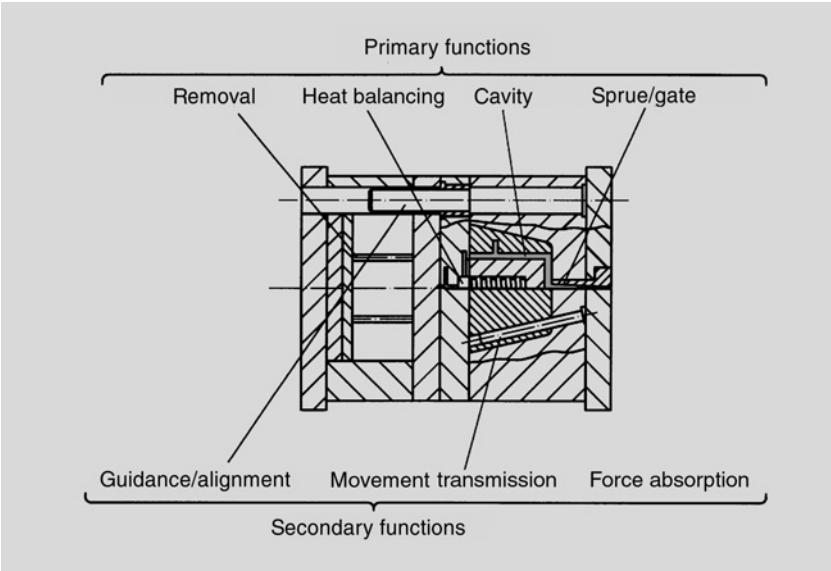

Figure 8-1 Functions of an injection molding tool (splits mold)

is well worth while, not least, because it can serve further uses for other development stages, such as the derivation of data required for production purposes or for compiling assembly instructions.

CAE

Apart from systems for generating an article's or mold's geometry, there are other additional computer-supported aids, that assist the designer in his work on other tasks. These programs are collectively known as CAE (Computer Aided Engineering). Finite Element Method (FEM) programs for mold layouts can be found amongst them, for instance. CAD and CAE programs must be capable of interchanging data with each other. Besides other advantages, the following benefits arise from employing computers:

FEM

- Improvement of design results by the application of scientific methods
- Improvement of the design process (information retrieval, databases)
- Acceleration of the design process with respect to the execution of routine tasks (e.g., creating, modifying, and storing drawings)
- Faster access to other plant data (e.g., work preparation, production) when the various computers are interconnected.

mold design

The overall process of mold design is divided into three phases:

Phase 1: Determining the mold principle

Phase 2: Mold layout (rheological, thermal, mechanical)

Phase 3: Compilation of production data

mold principle

The first phase consists of determining the mold principle. It is also often called *qualitative design*. This phase includes the decision on whether to use a single-cavity or multi-cavity mold, for example, or which type of mold (standard- or splits-mold, article ejection or other form of removal, heating/cooling arrangement) is to be employed.

mold layout

CAE

The second design phase includes the dimensioning of the functions complexes and modules selected in the first phase. This phase is described as *quantitative design*. The layout of the mold according to rheological, thermal, and mechanical considerations can be produced at the same time. It is now possible to produce this layout by a computer-aided method (CAE).

production documents
CAD

In the third phase, production documents are compiled. In principle, this could be considered part of the quantitative design phase. Nowadays, it is produced by a computer-aided method (CAD) in many cases.

8.3 Mold Layout

8.3.1 Overview

dimensioning phase

The dimensioning of the mold (phase II of the mold design) essentially includes the rheological, mechanical, and thermal mold layout. These aspects of the layout can be further divided into several steps, each with its own special emphasis:

Rheological:

- Determining the filling pattern
- Rheological calculation of the filling- and holding-pressure phase
- Layout of the runner system

Thermal:

- Cycle time calculation
- Energy balance of the mold overall
- Heating/cooling system layout

Mechanical:

- Kinematics
- Rigidity analysis

rheological layout

The quantitative layout of the cavity region and gating system requires primarily rheological expertise – in other words, knowledge of the flow characteristics of polymer melts.

thermal layout

The dimensioning of the mold temperature control system requires corresponding knowledge of the heat transfer subject.

mechanical layout

Mechanical and kinematic expertise are required in the dimensioning of the mold structure and the layout of the article removal system.

8.3.2 Rheological Mold Layout

filling characteristics

The filling characteristics of the cavities are determined in the rheological mold layout. The filling phase and holding pressure phase determine the properties of the molded part. The rheological mold layout can include several steps:

- Establishing the filling pattern (qualitative)
- Rheological calculation of the filling- and holding-pressure phase (quantitative, e.g. pressures and temperatures) and
- Layout of the runner system

filling pattern

Establishing the filling pattern, which can also be determined graphically, makes it possible to confirm the positions of

- Weld-lines (which develop at the conflux of two different melt-sections)
- Air entrapments (which develop when air is trapped by the melt)
- Suitable sprue positions.

Figure 8-2 shows the establishing of the filling pattern for two simple, plate-like moldings. This shows the positions reached by the flow fronts at different times. Each plate is filled from the gate (feed point).

Emanating from a single point by laminar flow, the flow-fronts spread like waves into the mold cavity, which has been empty until now. This results in concentric circles around the feed point. If the cross section is altered, as shown on the right side of Figure 8-2, the filling pattern will also change. For rectangular cross sections, these relationships can be calculated approximately by the following formula:

$$\frac{\Delta 1_1}{\Delta 1_2} = \frac{s_1}{s_2}$$

where $\Delta 1$ [mm] stands for the flow front progress and s [mm] for the article's wallthickness.

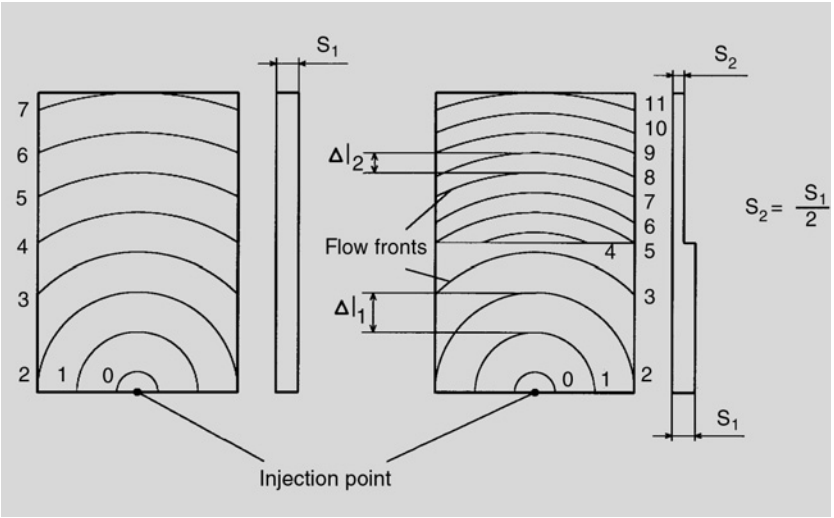

Figure 8-2 Establishing filling patterns for two simple, plate-like moldings

flow front

For example, if the height of the cross section is reduced by half, the distance from one flow front to the next will also be cut in half. This means that filling the right plate will take longer than filling the left one.

filling simulation

The following example illustrates the filling simulation. When molding a toy locomotive profile air is trapped at the far side, opposite the gate (Figure 8-3 left). This can also be predicted by simulation (Figure 8-3 right).

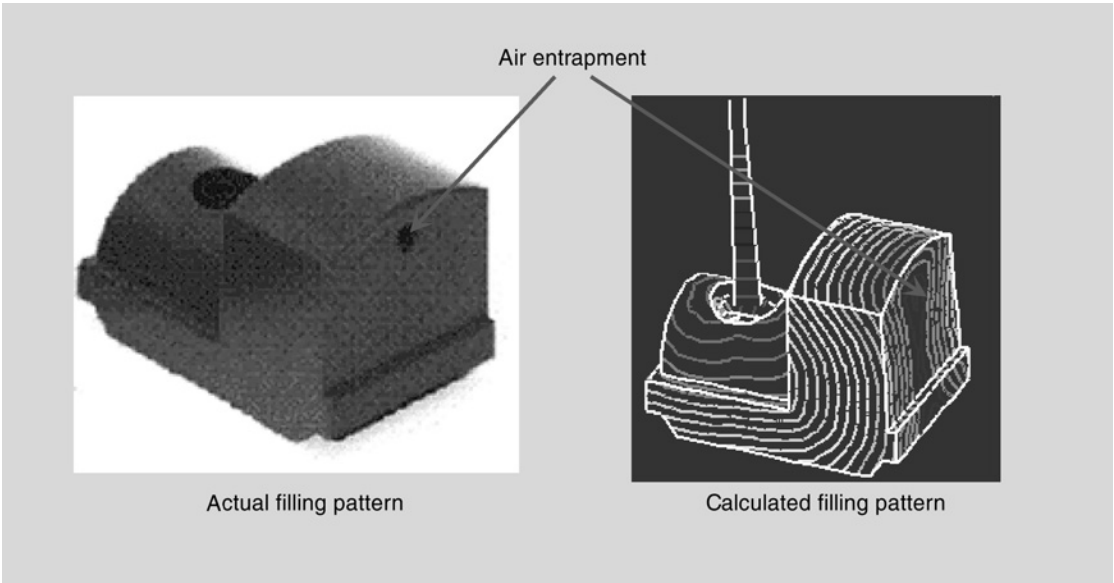

Figure 8-3 Filling pattern of toy locomotive

flow front profile

The profile of the flow front can be optimized in such a way by varying the wallthicknesses, that air entrapment is eliminated. Figure 8-4 shows the flow-front profile, as established by computerized filling simulation, based on a filling pattern method. This could also be produced manually, with a pair of compasses and a ruler.

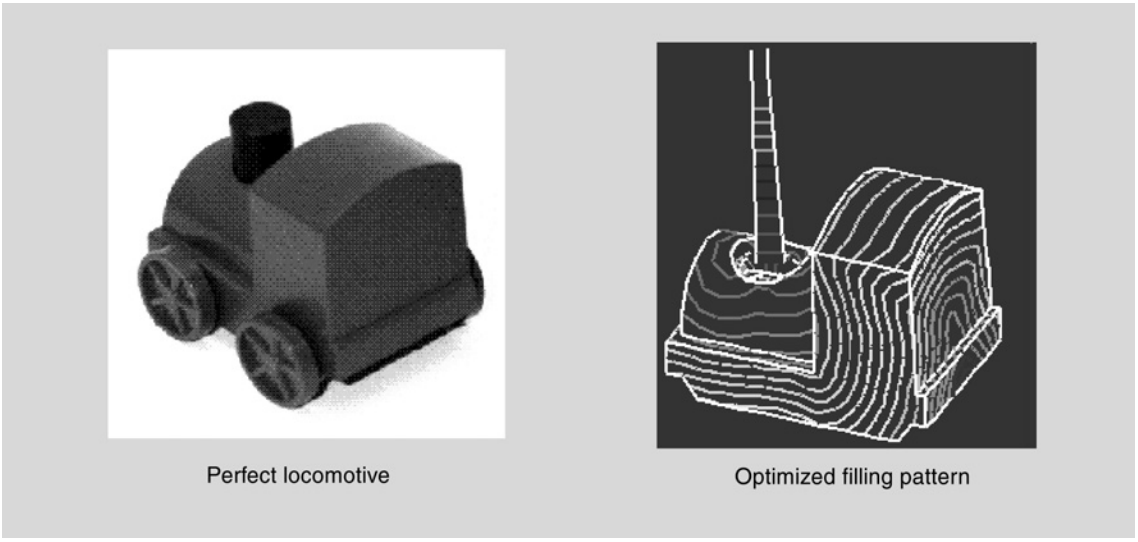

Figure 8-4 Flow front optimized by simulation

weldseams

Even the positions of weldseams, which develop when two flow fronts meet, can be determined with the aid of simulation.

material properties

processing data

This filling pattern is generally created independently of material properties and process parameters. In other words, it is partly established by applying simple graphic rules. The actual rheological layout of the mold is based on the following specifications: material and processing data, such as the compound's melt density, the injection rate, the injection temperature, and the material's rheological properties. These, for instance, enable statements to be made, regarding:

- Pressure requirements for mold filling
- Melt temperatures
- Speeds/velocities
- Shrinkage characteristics

pressure requirement

The pressure requirement for filling the mold cavity determines not only the injection molding machine model to be chosen, but also the size of the mold construction elements.

8.3.3 Thermal Mold Layout

cooling phase

Like the filling phase, the cooling phase is also critically important to the quality of the molded part. The injected part is cooled within the injection mold for the length of time needed for the part to become sufficiently solid and capable of being removed.

mold temperature control

The mold temperature control system must therefore be laid out in a manner which allows the heat of the molded part to dissipate uniformly and within the shortest possible time. Aside from the quality of the molded part, therefore, profitability is also strongly affected, because of the effect on the cycle time.

cycle time

The shorter the cooling time, the shorter the cycle time will be. The thermal mold layout also includes several stages:

- Calculation of cycle time
- Energy balance of the overall mold
- Layout of the heat-balancing system

energy balance

With knowledge of the material temperature, wall temperature, ambient temperature, plus the specification of the article removal temperature, it becomes possible to analyze the energy balance of the overall mold. Decisions on whether and how to provide the mold with thermal insulation are made at this stage of the layout. The performance of the temperature control system is also established at this stage. Figure 8-5 shows the heat balancing of an injection molding tool.

heat balance space

The term *heat balance space* refers to the space considered for heat exchange phenomena. The heat flow emanating from the molded article enters the balance space. The following pass-out of the heat balance space: the heat flow dissipated by the heat-balancing medium, the convective- as well as the radiant heat-flow (both to the environment), and the thermal conductivity flow, which enters the platens.

layout of heat-balancing systems

The next step is the layout of the heat-balancing system. This step involves establishing the number of heat balancing circuits required, the distances between the cores for the heat-balancing medium, the distances between the cores and the cavity surface, and the temperature and throughput rates of the heat-balancing medium. The design of the heat-balancing system is precisely determined by this layout. The goal is the most uniform dissipation of heat from the cavity region which can possibly be achieved.

cycle time

The optimal cycle time, which was described in the previous lesson, is calculated in the final stage. This maximizes the profitability of production. The cooling time amounts to 50–70% of the cycle time. It increases by the square of the article's wall-thickness. For this reason, wall thicknesses exceeding 6 mm (1/4 in) are rarely chosen.

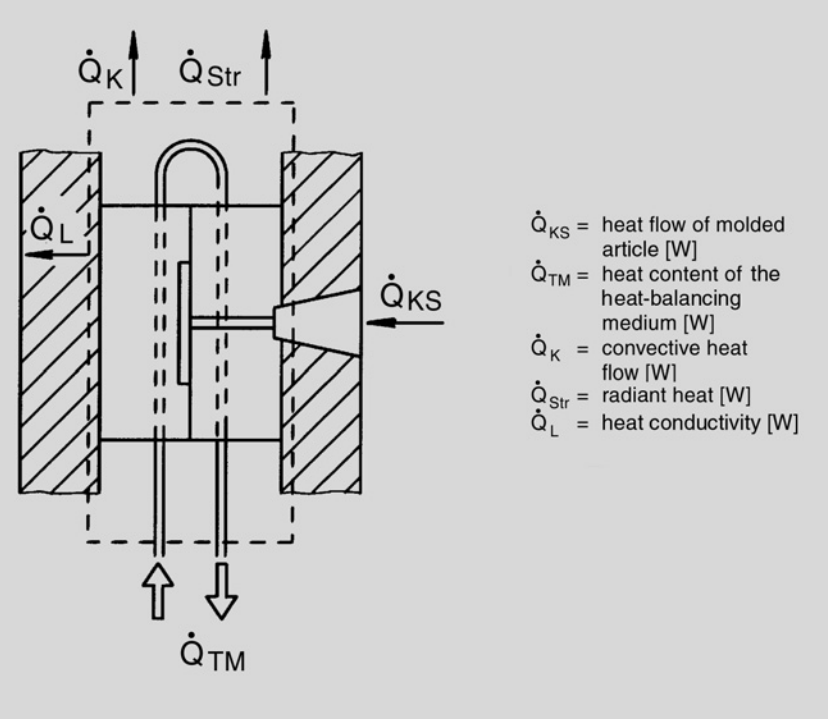

Figure 8-5 Heat balance of an injection molding tool

A rule of thumb formula for calculating cooling is given in greater detail in Lesson 7.5. The formula employs variables of the melt temperature, wall temperature, demolding temperature, as well as the plastic material's thermal conductivity.

Calculation of the CD's cooling time results in: *CD*

- The CD has a wall thickness of 1.14 mm (0.045 in) and is made of polycarbonate. It is processed at a material temperature of approximately $T_M = 330°C$ (625°F). The mold wall temperature is $T_W = 60°C$ (140°F) and the thermal conductivity of the plastics material amounts to $a_{\text{eff}} = 0.01\ \text{mm}^2/\text{s}$. The demolding temperature – measured at the center of the molding – is assumed to be about $T_E = 110°C$ (230°F).

- Calculation by cooling time formula results in a cooling time of $t_C = 2.5\,\text{s}$.

Current cycle times for the fully automatic production of CDs are given as 3.9 seconds, with the cooling time accounting for approximately 2.7 s. But it is quite possible, to achieve even shorter cycle times for this process.

8.3.4 Mechanical Mold Layout

Injection molds are among the most heavily loaded devices in industry, as they are exposed to clamping forces of up to several thousand tons and internal *deformations*

mold pressures up to 2000 bar (29,000 psi). Because these molds are intended for the manufacture of molded parts of extremely high precision, it is necessary to consider the deformations undergone by the injection mold under these loads.

mechanical mold layout

The mechanical mold layout is also produced in several stages. For example, factors related to kinematics and rigidity in the clamping direction are considered.

linear-elastic

modulus of elasticity

Because mold deformations are intended to occur in the linear-elastic range, an overlap between loads and deformations is permissible in principle. Linear-elastic means that the deformation changes linearly (i.e., along a straight line), as the force exerted upon a component increases. When the load is removed, deformation will return to zero. The component behaves like a spring. The modulus of elasticity is a measure of linearity for this response. The higher the modulus of elasticity, the less deformation will be experienced by a stressed component.

spring

The individual parts of a mold basically behave like a spring. When a spring is subjected to a load, it is compressed. When the load is removed, the spring relaxes and returns to its starting condition.

spring model

Therefore, the mold deformations are calculated on the basis of a spring model. The deformation characteristics of the component being tested can be simulated by an appropriate combination of springs. An example of a simple mold and the corresponding spring model are shown in the schematic diagram in Figure 8-6. The five elements of the component are divided into five springs. The laws of elasticity for series and parallel combinations of springs are needed for the calculation.

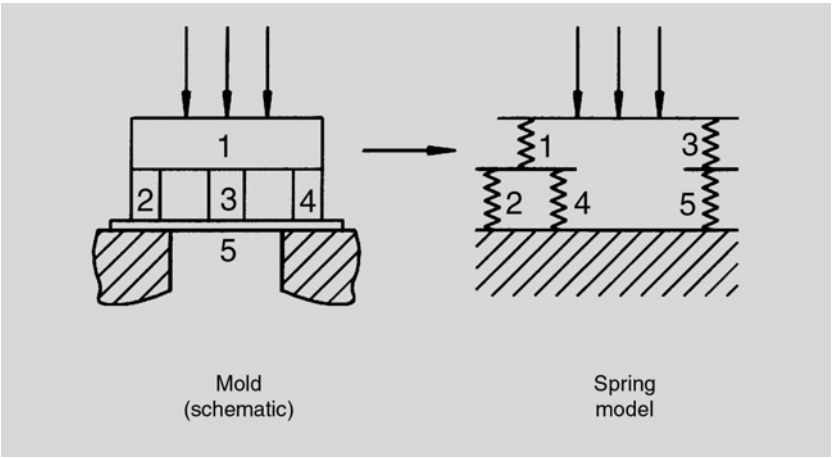

Figure 8-6 Spring-set model

transverse to clamping direction

One layout step is the consideration and dimensioning in the clamping direction. The criterion for this aspect of the layout is that platen deflection must not give rise to any prohibitively large gaps in the parting plane, which

would allow melt to intrude (flashing). This flash would eventually result in the destruction of the mold.

frictional forces

An additional step in the mechanical layout involves the consideration of components such as ejector pins and guidance systems. The forces which figure prominently in these considerations are inertial and frictional forces. These forces load not only the above-mentioned components but also the molded part. It is sometimes necessary to overcome a high degree of static friction, especially when the part is removed from the mold. This static friction is frequently more likely to cause damage to the molding than to the ejector pins.

computer program

Time-consuming calculations are necessary for complicated mold geometries and stresses. These tasks are carried out by computer programs.

deformations

Figure 8-7 shows a section through a mold in its stressed and unstressed condition. This computer calculation clearly indicates deformations of 4.0 mm (0.15 in) (unstressed condition) to 4.1 mm (0.16 in) (stressed condition) in the cavity area. For easier understanding, the deformation in the stressed condition has been exaggerated – that is, the representation is not true to scale.

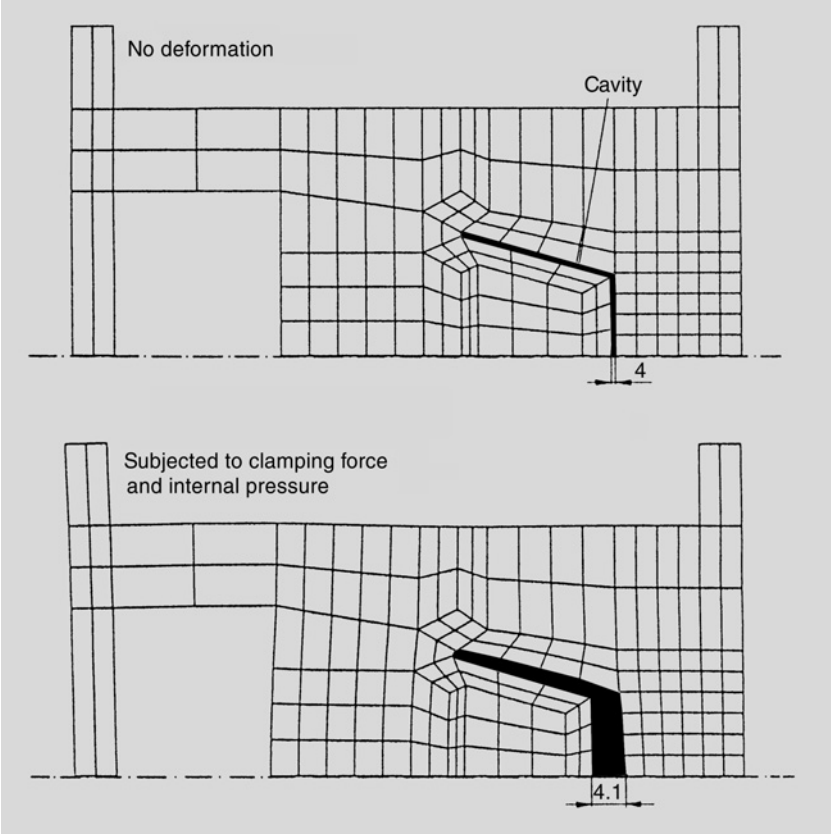

Figure 8-7 Simulation of deformation characteristics

Review Questions

No.	*Question*	*Choices*
1.	The design process can be divided into the following phases: qualitative design, layout, and _____.	control creation of manufacturing documents
2.	In addition to receiving the melt and forming the molded part, another primary task of the mold is the _____ of the molded part.	cooling prevention of shrinkage
3.	The primary task of 'receiving the melt' gives rise to the secondary task of _____.	'guiding the mold parts' 'absorbing forces'
4.	The _____ of the cavities is/are determined in the rheological mold layout.	filling characteristics appearance cooling system
5.	When the wall thickness of a thermoplastic injection-molded part is reduced by a factor of 2 while the flow volume is maintained at the same level, the flow front rate _____ by a factor of 2.	increases decreases
6.	The mold temperature control system should be laid out in such a way that a thermoplastic molded part cools as uniformly and as _____ as possible.	quickly slowly little
7.	An overlap between loads and mold deformations is permissible, because they occur within the _____ elastic range.	progressive linear regressive

Lesson 9

Quality Assurance in Injection Molding

Key Questions

What is quality?
Who is responsible for quality?
How is quality planned?
How is quality tested?
What is meant by quality management?
How important are safety at work and environment protection?

Contents

9.1 Quality
9.2 Quality Assurance
9.3 Quality Management
9.4 Integrated Management Systems

Review Questions

Prerequisite Knowledge

The Injection Molding Process (Lesson 7)

9.1 Quality

definition

One particularly notable definition of quality describes it as 'fitness for use.' Above all, the product must satisfy the customer. Quality is a factor which is difficult to measure directly, because there is no uniform standard for evaluation. Therefore, quality must be redefined for each different part.

product specifications

Quality is generally intended to mean that a product fulfills certain individual characteristics (specifications), which are expressed by the customer in terms of specific tolerances.

With injection molding, these requirements can be classified as shown in Figure 9-1, for example.

Type of requirement	Specific features
Geometric	Dimensional deviations Shrinkage Warpage Surface texture
Mechanical	Tensile strength Flexural strength Notch impact strength Modulus of elasticity Internal stresses
Internal	Specific volume Molar mass distribution Orientation
Optical	Gloss Color Transparency Homogeneity
Electrical	Specific resistance Dielectric coefficient
Chemical	Resistance to stress cracks
Profitability	Cycle time

Figure 9-1 Examples of quality characteristics (specific features)

This classification system lists specific product characteristics as guidelines for quality assurance measures. The most prominent characteristics will be determined by the application, a particular molding will be used for.

combination of features

Matters are further complicated by the fact, that some requirements come into conflict with each other. Therefore, it is often necessary to make compromises, when defining the quality of a molded article in terms of an optimum combination of specific features.

process target factors

Other requirements are directed more toward the injection molding process and the organization of the injection molding plant than toward the product per se. Examples include:

- Least number of rejects
- Least waste
- Meeting of deadlines
- Works-internal recycling
- Minimization of costs

9.2 Quality Assurance

competitiveness

The profitability and competitiveness of plastics processing companies are determined by the increasing demands on their flexibility and on the quality of their products.

quality demands

If we consider the injection molding plants which supply the automotive and electrical industries, for example, we see that the increased quality demands result from the continuous development of new areas of application and from the growing proportions of technical injection-moldings.

product quality

The increasing variety of products, a related increase in the number of products to be manufactured in smaller lots, and the intensified tendency toward automated manufacturing further increase the demands upon the manufacturing process and the assurance of the required product quality. Minimum stock-keeping by the automobile manufacturers also puts greater strain on injection molders, most of whom work under contract. Under the "just-in-time" specifications, this particularly applies to logistics and the meeting of deadlines.

quality management system

Almost every customer demands a sophisticated quality management system from its contract injection molder. This is meant to reduce to a minimum the risk of faults, introduced into his own factory, by contractor-supplied products.

product liability law

The scope of the product liability law has recently been increased. If the manufacturer of a product cannot produce adequate evidence of sufficient product quality, the manufacturer may be held liable for any damages which have occurred in connection with the product.

company objective

Ensuring the quality of products and processes, thus represents one of the most important prerequisites, for securing success in the international market not only now, but also in time to come. As a company objective, constant improvement of quality is also the guarantor for a company's commercial success.

Nowadays, safeguarding and improving specified quality has to be planned systematically and put into practice in all of a company's relevant areas. The above mentioned quality management system serves that purpose.

This philosophy contrasts completely with past definitions of quality. These only concerned themselves with meeting the product characteristics, that were being individually checked at the end of the production process.

ISO 9000
QS-9000
VDA6.1

The ISO 9000, (or the QS-9000 and also the VDA6.1, which have specifically been designed for the automotive industry), represent international standards. They contain guidelines for the structure and essential contents of a quality management system.

certification

Customers – and the automotive industry in particular – demand certification of a quality management system from their supplier, which is based on one of the earlier mentioned standards. The reason is, that the supplier's own assessment can be dispensed with, as far as possible, because certification is carried out by an independent organization. Granting of a certificate is subject to regular checks (audits).

prevention of faulty products

The basic idea behind quality assurance nowadays is the prevention or elimination of faulty products, by the precise open- and closed-loop controlling of production runs, instead of sorting-out rejects as a separate operation.

Figure 9-2 shows the qualitative correlation between the cost of a design-modification during the article's development process and the potential savings, that can possibly be made.

The later an error is detected and eliminated in the phases of the product development process, the higher the resulting cost will be.

9.3 Quality Management

The quality of both product and process essentially affects all of a company's employees and their departments. In order to safeguard the quality standard within a company, agreement is necessary between departments and appropriate procedures and tools for the job must also be provided. These tasks should be carried out by a specialist organizational unit, known as Quality Management.

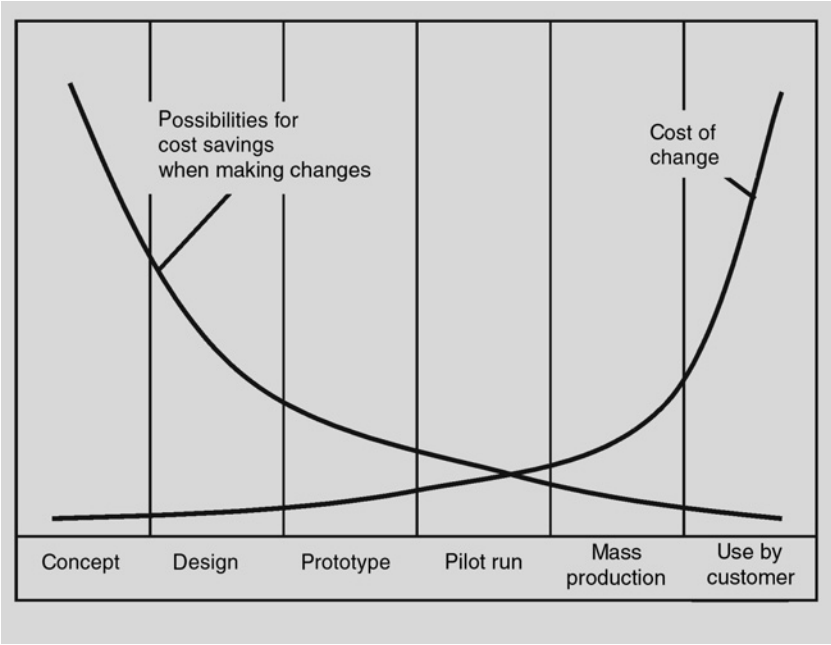

Figure 9-2 Costs of a modification during the article's development process

organization

The organizational hierarchy must be adapted to suit the special nature of each company. Figures 9-3 and 9-4 show two organizational models, which are frequently found in small and medium-sized plants. In any case, it is important to demand that quality management is independent of the other departments and directly responsible to the executive management.

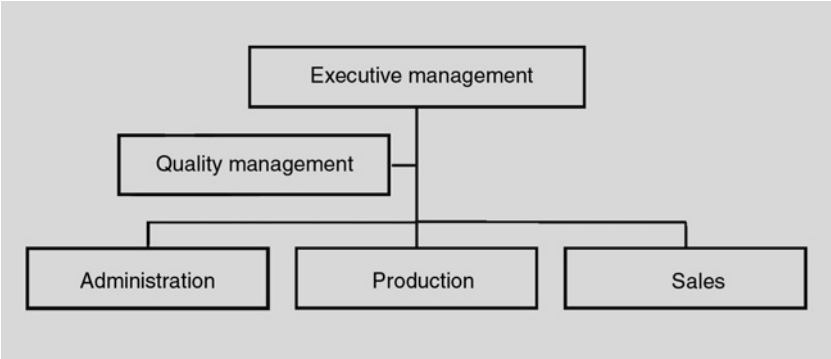

Figure 9-3 Organizational integration (version A)

In this version, the quality management team occupies staff position and is organizationally directly responsible to the executive management.

The structure of the company's quality management must also be considered in relation to the firm's situation. For example, this structure depends on the size of the company and its product range.

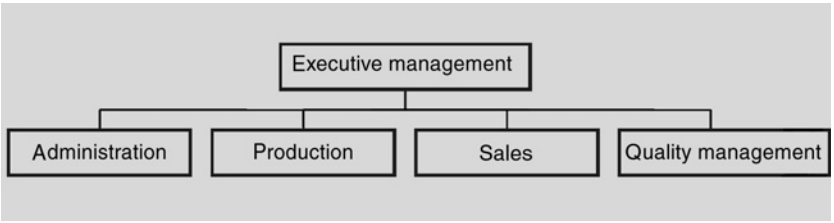

Figure 9-4 Organizational integration (version B)

9.3.1 The Quality Assurance Concept

quality assurance

Under quality assurance is to be understood the totality of all organizational and technical activities, intended to safeguard the design and assure the quality of the molded article. This involves consideration of profitability and extends to the product's suitability for use, as conceived by the customer. The sum total of all activities and their correlation will be described within the scope of the quality management system, in relation to a given company.

The tasks of quality assurance can be characterized by the following concepts (Figure 9-5):

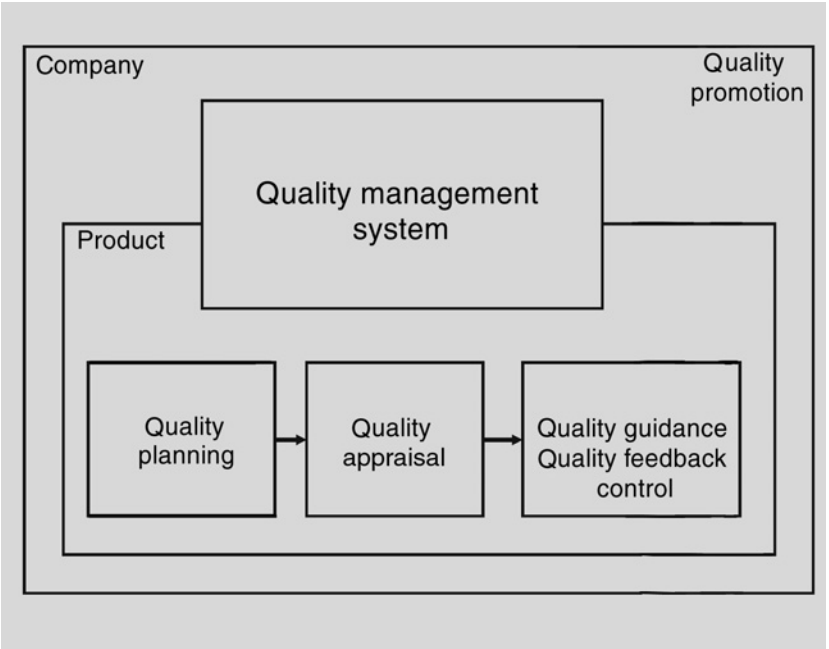

Figure 9-5 Systematic quality assurance

quality management

targets

Quality management refers to that aspect of the overall management task, which determines the quality policy. Based on that policy, it describes the quality aims for the organization's departments, defining and introducing methods, which ensure the attainment of these quality targets.

quality management system

These methods make up a firm's quality management system, including resources, that monitor the achieving of the quality objectives.

quality promotion

Quality promotion is embedded within quality management. The essential tasks of quality promotion include consultation, reporting, establishment of guidelines, training, and motivation of fellow employees.

quality planning

Within the framework of new- or progressive product development, quality planning also means, to clearly determine the customers and/or the market's demands. These are then translated into testable and attainable quality requirements for the end product and/or the individual components of the product. To this end, it is necessary to establish the conditions under which the product will be used. The quality requirements must then be selected, defined, and their tolerances established.

statistical experimental design

There are standardized methods for quality planning. These consist of simulation calculations during the development phase, for instance, or series of tests on the new product. During these tests, such process parameters as temperature or pressure are varied, in order to find a processing window, at which the specified properties are met and the production process is as unaffected by interferences as possible (statistical experimental design).

quality testing

When quality specifications have been determined for the product, processes are employed within the scope of quality testing and quality control, with whose help it is ensured, that the product specifications are also achievable during production.

disruptive influence variation

While considering the production process, by which an article is made, one of the first things one notices is, that not every molding possesses identical properties, because these vary slightly: they are subject to variation. This is the result of disruptive influences, such as fluctuations of the ambient temperature or of raw material properties, which inevitably affect the production process (noise factors).

tolerance

That is the reason, why instead of a firm value, a permissible tolerance is assigned to a product's characteristic, within which this is allowed to fluctuate.

quality testing

Initially, quality testing has the task of establishing the 'actual status' of the production run, i.e. the statement, if required tolerances are being adhered to by all parts concerned. It would usually prove too involved, to measure characteristics deemed important by the customer on every single product. Very often this would be physically impossible, because adherence to these characteristics could only be proved, by subjecting the molding to a destructive test.

random sampling

For either reason one is obliged to test just a few articles and judge the whole of the production by those results. Statistical processes are employed in this case. If a fixed quantity of products (random sampling) is tested by this method at regular intervals, the test result allows conclusions to be made with regard to the quality of all articles produced during that period. These processes are covered by the term SPC = Statistical Process Control.

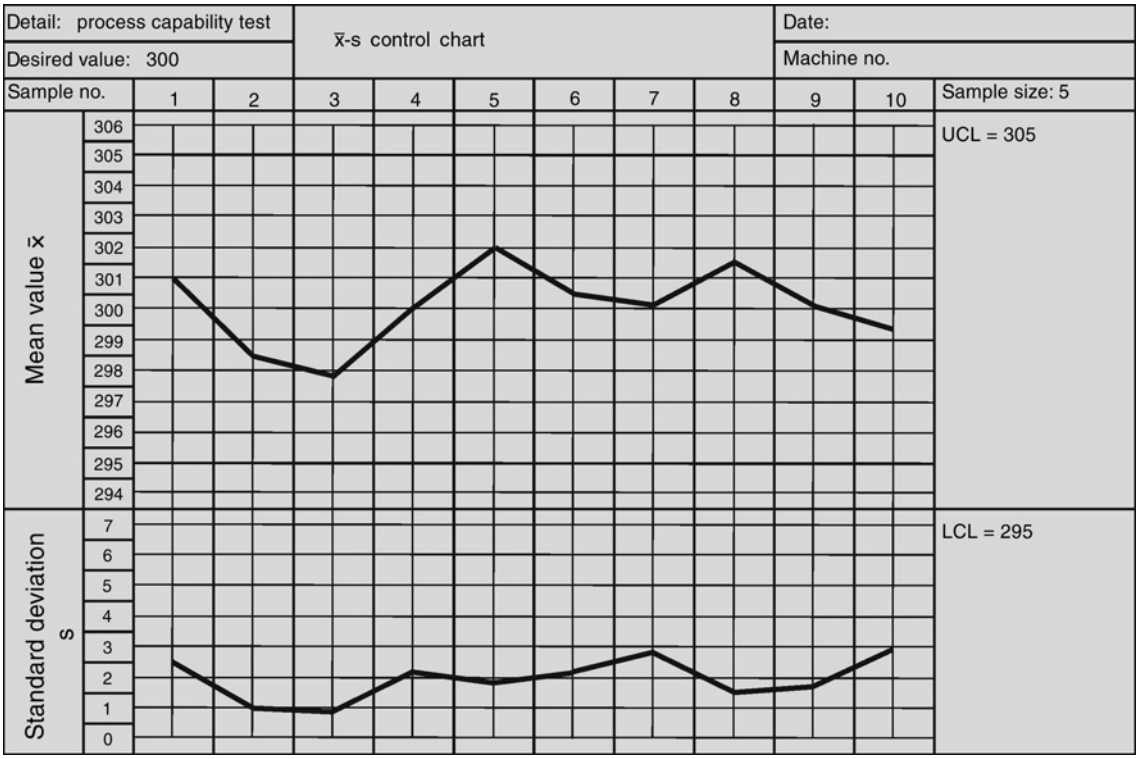

Figure 9-6 Quality control chart

control chart

The control chart is an aid to evaluating the results. Figure 9-6 shows an example of an $\bar{x}$-s control chart. The mean values and standard deviations of individual samples are entered and can be evaluated graphically. This gives an indication of scatter and the status of the process compared to the permissible tolerance.

example
'upper control limit'
UCL
'lower control limit'
LCL

In this example, the scatter for the average value of the random samples has been calculated at 300 ± 5. This means, that the upper control limit (UCL) is 305, while the lower control limit (LCL) is 295. The average value of the selected random samples fluctuates between 302 and 298, and is therefore within the scatter range.

processability

If for a certain period the results of such random sample tests are added together, characteristics for a process are obtained, such as its short- or long-term capability, for instance.

For the short-term capability of a process, 50 consecutively produced moldings are checked. This results in information regarding machine-induced scatter. (In the past this was also known as machine capability).

With long-term capability, 25 random samples from every 5 moldings are selected over a longer production period. It is thus possible, to obtain additional information regarding the effect of long-term disruptive influences, acting on the process.

Variation within the process should always be smaller than the tolerance and rather be in the center of the tolerance band, so that the products do not immediately exceed the tolerance, during process deviations.

quality control

When it is shown, that a process veers off in an unwanted direction, it is possible to intervene and control ('steer') the quality of the product, by changing the setting values of the process in such a way, that the product characteristics return to their required level.

SPC

SPC (Statistical Process Control) describes the method, by which the product properties to be produced are recorded by measurement. These data are then statistically evaluated and analysed by control chart, for example. Based on those results, the production process is adjusted by suitable means, preventing product characteristics deviating from the permissible tolerance.

quality control

With the controls described so far, it is only possible to intervene in a process, once deviation from an ideal value has been ascertained. It would be preferable, not to allow these deviations to happen in the first place.

The aim of keeping the injection molding process always at an optimum level is pursued by methods, which control quality by feedback. Prerequisite for the success of such methods is, that the connection between the product properties and the influencing process values they are subject to, are known.

These connections can be determined by various methods of process analysis, so that they can then be employed for feedback-controlling the product quality.

Essential requirements are: the possibility for logging process values, calculating the product properties by computer program and corrective intervention in the machine's control system.

Established partially in cooperation with machinery manufacturers, programs with which certain product properties can be feedback-controlled have been on the market for some years now.

9.4 Integrated Management Systems

quality management system

The establishment and employment of a quality management system within a company initially means the quality-safeguarding of products and processes, as well as their continuous improvement.

By examining the individual elements of a quality management system, it very quickly becomes apparent, that a great many processes within a company will have to be described by this term. This, however, will still leave a large number of processes within the company, that have no direct influence on the quality of products and will therefore not have to be considered within the scope of a quality management system.

environment management system

On the other hand, these processes decisively affect a company's success from the market's, the employees' and the environment's aspect. This makes it necessary, to specify the processes. For instance, an environment management system to the specifications of ISO14000 must be part of this. ISO14000 describes standards for processes and equipment.

When establishing an environment management system, it is necessary to start by compiling a program, in which the company's environmental aims, as well as measures and responsibilities for their putting into practice, are described and initiated. Achieving the aims in comparison to the requirements of ISO14000, as well as the continued improvement of the system, is being checked through audits. The respective processes must be described in an Environment Manual and adherence to processes as well as achievement of aims confirmed by certificate, issued by an independent certification authority.

The following are examples of environmental aims:

- Awareness-improvement – by measurable means – of employees, to the effects their own work has on the environment
- Reduction of production waste
- Reduction in the use of dangerous water-contaminating agents during production runs
- Reduction of energy consumption
- Taking environmental aspects into consideration, when choosing suppliers

safety at work system

When laying out the bulk of processes being dealt with within the company to meet the safety regulations currently in force, all requirements must be satisfied. They must also ensure maximum safety at work, minimizing the risks to life and limb as well as material damage. In order to comply with these requirements, the necessary measures and the monitoring of their observance must be described and checked increasingly within the scope of a safety at work system. Appropriately qualified technical advisory services are often employed for these matters.

integrated system

Attempts are being made at concentrating the various requirements in a single, integrated management system. This should overcome the problems arising from the multitude of internal and external demands made of management. It will also prevent the occurrence of too many competing systems within the firm, which would restrict freedom of action too severely.

The quality management system is usually burdened with the most far-reaching demands. It is also one of the longest established offices. Therefore it is reasonable, to attempt integrating other demands, such as those of an environment management system, into already existing processes.

In the most favorable situation, one thus obtains clear, structured documentation of a firm's organization, with unmistakable instructions for action. These will then enable fellow employees to work effectively towards achieving the company's goals.

Review Questions

No.	*Question*	*Choice*
1.	Intensified tendencies toward automation are placing ever _____ demands upon the manufacturing process and the required product quality.	lower higher
2.	From an organizational standpoint, quality management can be incorporated into the injection molding plant as a separate department or as a _____ .	staff office control office
3.	Assurance of _____ is one of the most important targets for a firm.	product quality quality checking
4.	The _____ a defect is detected and eliminated in the phases of product development, the lower the cost of the resulting change will be.	earlier later
5.	Requirements for the evaluation of product quality in injection molding can include geometric, mechanical, _____, or electrical features, for example.	mathematical optical temporal
6.	In addition to quality management, the overall activities of quality assurance include quality support and _____.	manufacturing quality planning
7.	The standard deviation (s) and the _____ are entered on the control chart for the purpose of evaluating process ability.	mean value ($\bar{x}$) desired value
8.	In short-term capability analysis, the total number of selected parts should be at least _____.	20 35 50
9.	The goal of quality assurance measures is to _____ quality instead of just checking it.	improve produce

Lesson 10

Recycling of Plastics Waste

Key Questions

Why reutilize plastics?
What types of reutilization cycles exist?
Which plastics can be reutilized at present?
What happens to plastics waste from production-runs, industrial and domestic sources?
Which technical and organizational problems must be solved, when recycling plastics within molding shops?

Contents

10.1 Reutilization of Plastics
10.2 Recycling of Production Waste
10.3 Recycling of Industrial and Domestic Plastics Waste

Review Questions

Prerequisite Knowledge

Basic Principles of Plastics (Lesson 1)

10.1 Reutilization of Plastics

waste reutilization

scrap material
material

The reutilization of 'waste materials' has increasingly been the subject of public discussion over past decades. In place of 'waste,' it is actually more correct to say 'scrap material' . This indicates, that we are necessarily dealing with re-usable material, although it exists in a different form. 'Reutilization' means, that collected waste materials are not left unused, but are treated, returned to the production cycle as a starting material, and processed to create new products.

recycling cycle

These considerations have led to the idealistic concept of utilizing all substances in a manner similar to natural processes – that is, to reintroduce them into a cycle. Therefore recycling is not just a means of producing goods more cost-effectively, but it also greatly reduces environmental hazards.

environmentally friendly

Recycling not only reduces the amount of waste, that has to be disposed of, but it also represents a great saving of natural resources and energy, that would otherwise be required for producing new material.

technology of recycling

Recycling of plastics can be regarded as technically solved: in principle, there are no longer any plastics, that are not reusable. No other material offers so many recycling possibilities, as plastics materials do.

recycling methods

Which recycling process represents the ecologically and economically most suitable one, is subject to a series of factors. There are three basically different kinds of recycling:

material based recycling

- Material based recycling

raw material based recycling

- Raw material based recycling

energy based recycling

- Energy based recycling

These recycling methods can be integrated into various recycling circuits (Figure 10-1).

It will be obvious, that there must be short and long recycling circulation periods. The time it takes for a plastics product – once used – to be reusable as a new product, differs in duration. The shorter the 'life cycle', the less input is required for the product to be recycled. Thus shorter 'life cycles' are often ecologically preferable to longer ones.

in-house recycling

Such short 'life cycles' can be found with the "recycling of production waste", which is often environmentally very friendly as well as economical, because pure grade materials are being reused. At present, this form holds the largest share of plastics waste recycling as a whole.

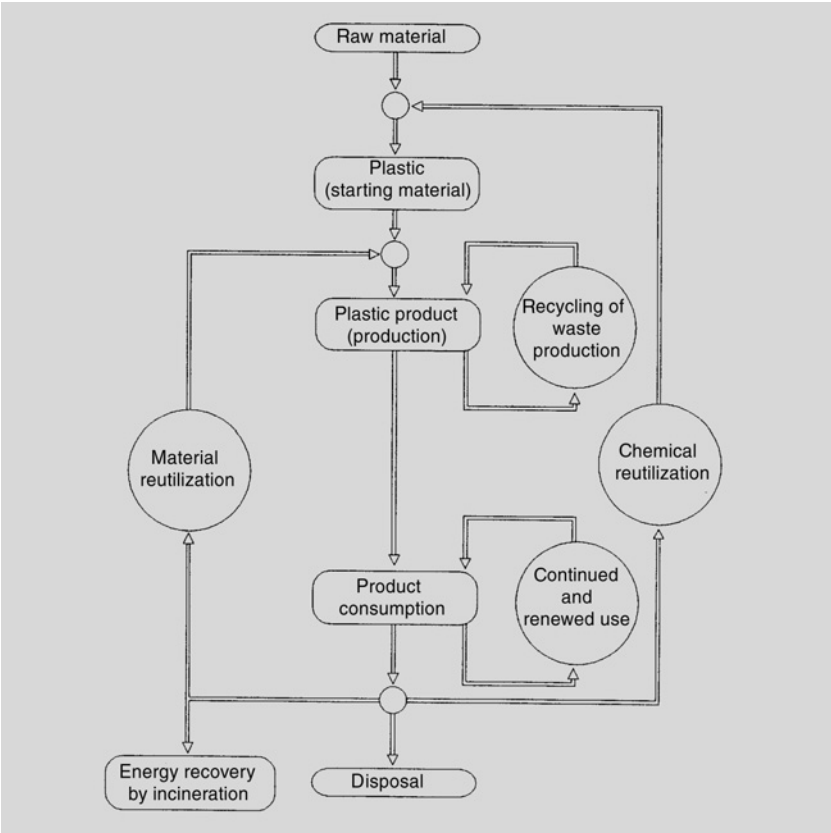

Figure 10-1 Recycling periods for plastics waste

thermoplastics

The reusability of plastics depends on the material type. Thermoplastics can be melted by applying heat and then reused as material. Waste-materials ought to be of identical grade wherever possible, in order to achieve good product characteristics.

identification

Symbols on plastics products identifying the material type/grade of which they are made, considerably facilitates pure grade collection. Nowadays there is an obligation in some countries for identifying plastics, which is a great help with material recycling.

mixed plastics

When remelting mixed plastics, certain materials are destroyed, due to the temperatures required, whereas others have not even started to melt. Figure 10-2 shows the melting temperature ranges of PVC, PA and PC, for instance.

melting temperature range

PVC has a melting temperature range of 120°C–190°C (248–374°F). The one for PA lies between 235°C and 275°C (455–527°F). For PC – the plastic from which our CD is manufactured – the range is between 270°C and 320°C (518–608°F). Clearly there is no common melting temperature for a mixture of different types of plastics. For example, at a temperature of 250°C (482°F) – an optimum melting temperature for PA – the PVC is fully decomposed and the PC has not even begun to melt. Therefore, this threefold mixture could not be

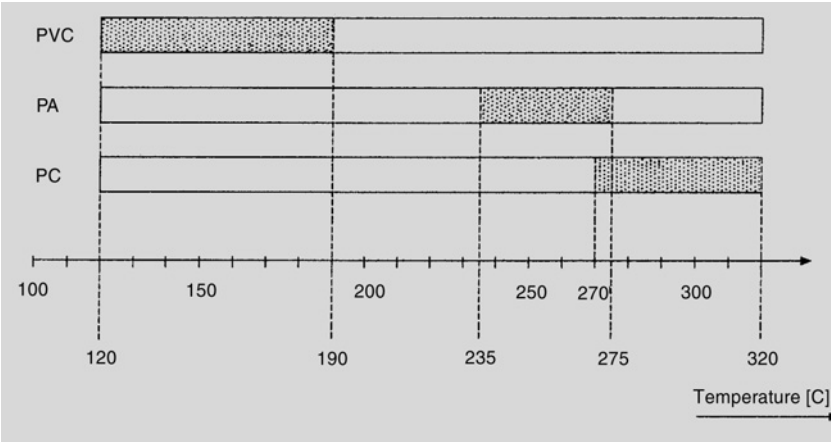

Figure 10-2 Melting temperature ranges of various plastics materials

used to produce a homogeneous plastics melt, which would fulfill certain quality conditions.

impurities

Impurities which cling to the wastes should be avoided or removed. Otherwise these foreign substances will be melted along with the plastic, thus impairing the quality of the resulting products. For example, the impurities in yogurt cups (i.e., the remaining yogurt) often account for a greater proportion of the overall weight than the container itself, which weighs only about 6 grams (0.2 oz). When plastic wastes are collected, there is often a greater recovery of the 'impurity portion' than the actual 'plastic' raw material. These impurities must then be removed, which, in turn, raises the price of the recycled material.

grade purity

Recycling of thermoplastics achieves the best possible results when the wastes are separated into perfectly pure grades. Within each material-grade, waste should be uniform with regard to type of plastic, as well as its additives and fillers. The production of high-quality moldings also requires the waste to be free of impurities.

CD recycling

How can a CD be reutilized? The CD itself is a composite material consisting of three layers:

- one of crystal clear PC,
- the reflective layer of aluminum or gold,
- and a protective coating of varnish.

These different materials can only be separated from each other by a process, specifically developed for this purpose. This enables all CDs, CD-ROMs and other optical data carriers made of PC to be reutilized.

It is a different story with the three-part CD case: base and lid are of crystal-clear PS, whereas the insert part, which retains the CD, is of colored PS.

Sorting the CD case components by color and turning them into regrind, allows the clear parts to be reutilized for producing new, clear moldings. There are also paper sleeves for CDs on the market now, which can also be reused accordingly. The CD list of song titles recorded on the CD is made of paper. It is not glued to the plastics case, so it is easy to remove for recycling.

CD list

10.2 Recycling of Production Waste

When moldings are produced from plastics, a certain amount of the processed material will consist of waste (e.g. solidified sprues and runners). The waste content varies between 5% and 50%, subject to molding shop and product. These waste materials are often unavoidable. For example, waste is generated when an injection molding machine is started-up. The machine produces purgings and rejects, until homogeneous melt is discharged from the plasticating unit. Similar waste is generated during color changes and cleaning (purging) or maintenance.

production waste

When the waste materials are collected in a clean state, as pure, unmixed grades and colors, they can be reutilized at a high level of quality. The goal of reutilization is to treat waste plastics so effectively that they can be used as a substitute for new material.

reutilization

Figure 10-3 summarizes the various means used for recycling production waste.

recycling schedule

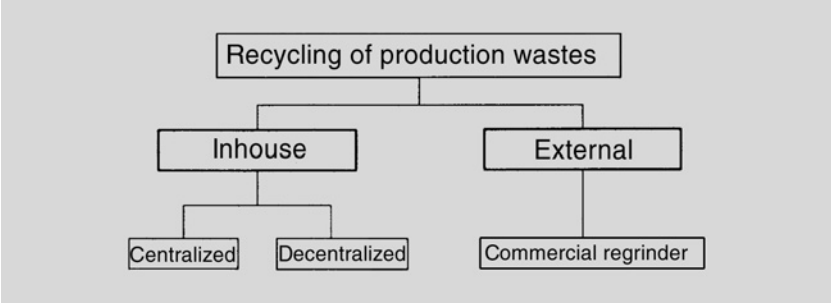

Figure 10-3 Recycling of production waste

There is a distinction between internal and external recycling. Internal (or in-house) recycling can be organized in a centralized or decentralized manner. The recycling of plastics waste generated during production-runs is widespread. For economical reasons, small to medium-sized mold shops often work with commercial reprocessing firms. The services offered by them include the professional reprocessing and sometimes even the marketing, of the waste materials.

commercial reprocessors

Larger molding shops usually reprocess their production-generated plastics waste material themselves. The waste materials, collected in a clean and unmixed state, are mechanically reduced to chips in granulators, which are

granulators

charged automatically or manually. Once the material has been ground into chips approximately 4–6 mm (0.15–0.23 in) long, it can be processed by ordinary plastics processing machinery as a partial or complete substitute for new material.

recycling process

The schematic diagram in Figure 10-4 shows a decentralized in-house recycling process.

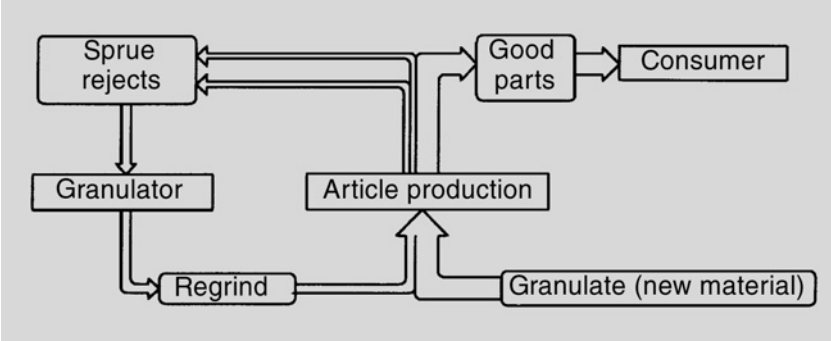

Figure 10-4 Principle of a decentralized in-house recycling process

The granulator is integrated into the production process. The plastic waste chips are added to the new material in suitable proportions.

auxiliary granulators

There is a wide variety of granulator sizes and designs. Regrind is usually produced in centrally located machines, the sizes and capacities of which are adapted to the respective plant. However, it is also possible for each injection molding machine to be equipped with a small auxiliary granulator. This obviates the transportation of the waste and prevents accidental mix-up of different plastics grades to the greatest possible extent.

10.3 Recycling of Industrial and Domestic Plastics Waste

plastics waste

The possibilities for treating plastics waste from industrial and domestic sources are limited. The reason is that these wastes are often dirty and contaminated with foreign materials. Furthermore, these wastes usually represent a mixture of different plastics grades. In many cases, treatment is not worthwhile from a financial standpoint. In some cases, it is not even possible technically. If plastics were collected by types of polymer, recycling would become considerably simpler. Because only a few materials are separated by grades, these wastes must be purified in costly processes.

polyolefins

Polyethylene (PE) and polypropylene (PP) – also known as polyolefins – have proven to be especially suitable for recycling. One reason is that these are mass-produced plastics which occur quite frequently, making up as much as

60% of all plastic wastes. But another reason is the great thermal stability of polyolefins, so that they suffer very little damage when remelted.

example "bottle crate"

A good example of a well-functioning life cycle for recycled industrial waste-material is that of bottle crates molded in PP. The recycling of bottle crates is presented schematically in Figure 10-5.

bottle crates

Rejected bottle crates, that have become unfit for use, are collected at their distributor depot. As every distributor depot only takes back its own bottle crates, they will always be of pure grade and of identical color. The plastics processor grinds these crates to fine particles in large granulators. Contaminants clinging to the plastic are automatically washed off with water. The resultant washed regrind is dried, dosed with additives and injection-molded into new bottle crates, without adding any new material. Therefore the bottle crate is a 100% recycled product.

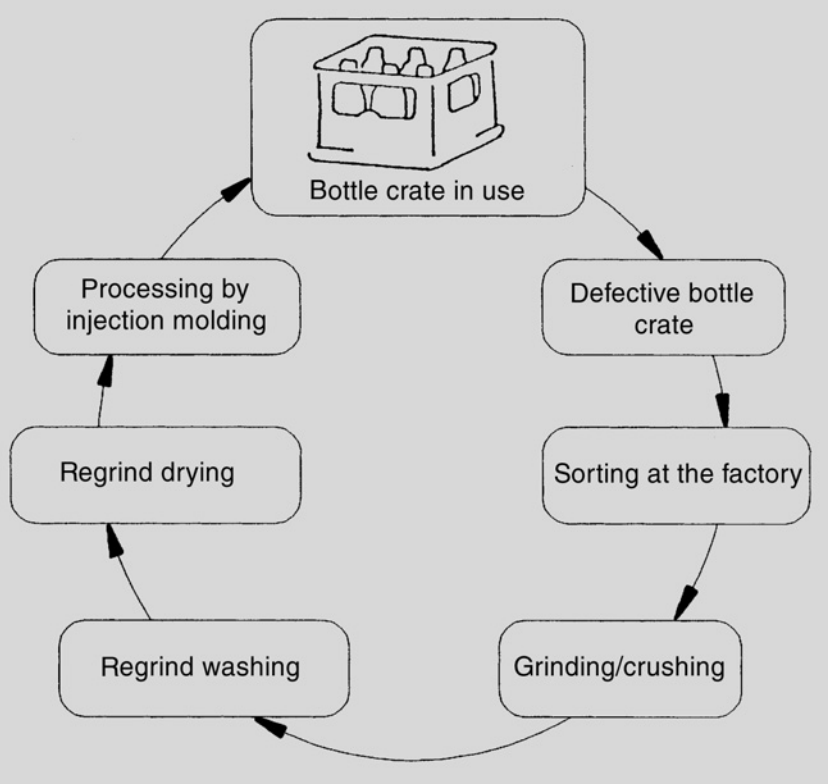

Figure 10-5 Bottle crate recycling

Review Questions

No.	*Question*	*Choices*
1.	Material reutilization of plastics waste can contribute to a reduction in the consumption of _____.	raw materials energy and raw materials
2.	The _____ the periods between material recycling, the more environmentally friendly it is, as a rule.	longer shorter
3.	Plastics waste-materials can be more effectively reutilized, when they occur in a clean and _____ condition.	contaminated unmixed mixed
4.	In most cases, it is _____ to treat plastics waste from production-runs.	possible impossible
5.	An example of effective recycling of plastics waste from industrial and domestic sources is the _____.	CD milk carton bottle crate
6.	The reutilization of plastics from industrial waste-materials primarily involves the collection of polyolefins and _____.	PE PVC PET
7.	Pure recycling materials can fulfill _____ quality requirements.	even high only low
8.	When plastic moldings are provided with identifying marks, it becomes _____ to collect plastics waste, separated into grades.	easier more difficult
9.	Plastics waste should not be regarded as cheap material, but as _____ reutilizable raw material.	worthless valuable
10.	Nowadays CDs can be _____.	reused not reused

Appendix I

The Modern Injection Molding Company

Key Questions

What is the structure of an injection molding company like?
How are orders processed within an injection molding company?
Which latest specifications are currently of interest?

Contents

Hierachical Structure of an Injection Molding Company
I.1 Structure of an Injection Molding Company
I.2 Order Processing Organization within an Injection Molding Company
I.3 Specifications for Injection Molding Companies

Prerequisite Knowledge

The Injection Molding Machine (Lesson 2)
The Plasticating and Injection Unit (Lesson 3)
The Clamping Unit (Lesson 5)

I.1 Structure of an Injection Molding Company

injection molding company

An injection molding company represents a socio-organizational structure. All employees contribute to the firm's success. For an injection molding shop to produce high-quality moldings, the individual departments must cooperate.

organizational structure

Figure I-1 represents the organizational structure of a medium-sized to large injection molding company, i.e. a company of more than 50 but fewer than 500 employees. The organizational structure determines the way, in which the individual departments or functional sections are assigned hierarchially in relation to each other. Two main areas are highlighted:

- Mold making and
- Injection molding shop.

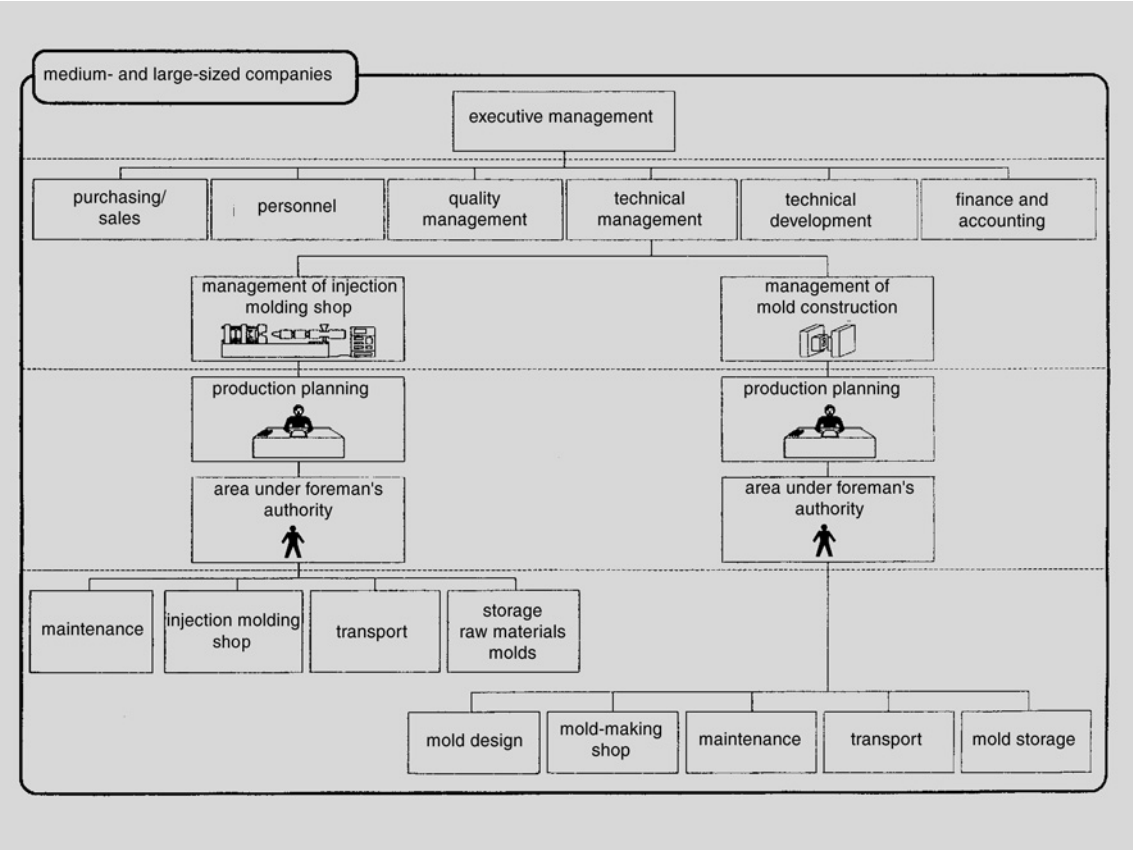

Figure I-1 Organizational structure of an injection molding company

mold making

injection molding shop

The mold making department is concerned with the machining of metal, whereas the injection molding shop produces moldings by plastics processing. Both are organized differently. Whereas the mold making department is staffed with qualified toolmakers mostly, the injection molding shop employs many unskilled and semi-skilled workers, apart from process technicians for plastics and rubber. The mold making department differs in size in many injection molding companies: a large proportion either produce no or only a small number of molds in-house, but most of them maintain and repair them. Subject to the company's size, other production areas may be added, such as an assembly section, where several modules are assembled into part of a system, for instance.

group cooperation

Due to the high specifications production has to work to, new forms of operating organizations have become established in injection molding companies. Here group cooperation in the production shop has evolved into the modern work-organization principle. In these instances, areas and terms of responsibility may and do change. There is no longer talk of demarkated areas of responsibility, headed by supervisory authorities, but of production segments, or even production sub-cells. The part played by the supervisory authority will evolve into the combined function of coach/works manager.

I.2 Order Processing Organization within an Injection Molding Company

order processing organization

Apart from the hierarchical structure of a company, it also possesses an order processing organization, which determines the way in which orders are handled within the firm. Processing is documented from receiving and acknowledging a customer's order to the dispatch of the goods. The more efficient order processing has been organized within a company, the greater are that firm's chances of competing in the market. An example of an injection molding firm's order processing organization is shown in Figure I-2. This also demonstrates quite clearly the different departments concerned: the production line as such, i.e. the injection molding shop, and the mold making department.

new order

repeat order assembly

It can be seen, that all of the company's operational areas work together. For processing, different departments will be involved, depending on whether this is a new order, a repeat order, or an order requiring additional assembly work. New orders require more time, because the article as well as the mold must first be designed, and then produced. For a repeat order, it is merely required to change an injection molding machine's mold, by retrieving the appropriate one from the mold storage area.

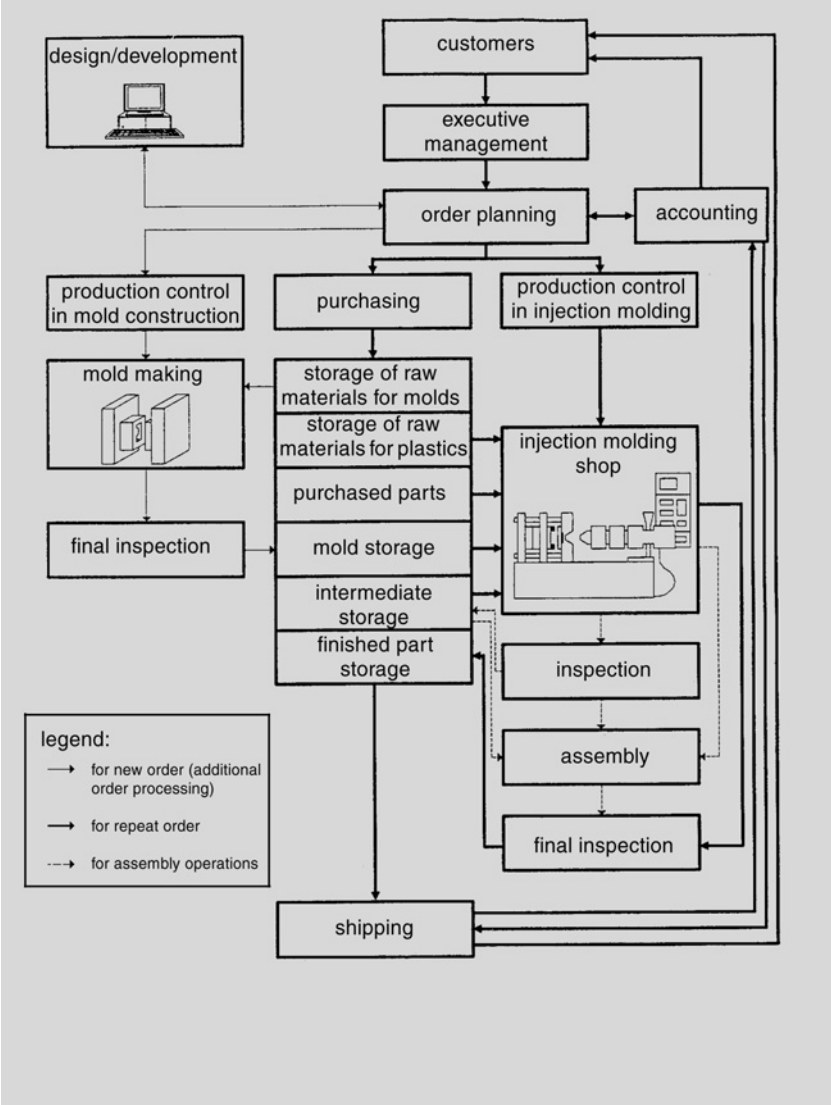

Figure I-2 Order processing organization within an injection molding company

I.3 Specifications for Injection Molding Companies

success factors

The specifications, under which an injection molding company is obliged to run its production nowadays, are manifold. Apart from such success factors as "quality" and "price", the "time" factor increasingly gains in importance with serving a market of close customer-relationships. It even becomes the decisive competitive parameter.

Current market-specifications demanded of injection molders in a general market situation are shown in Figure I-3.

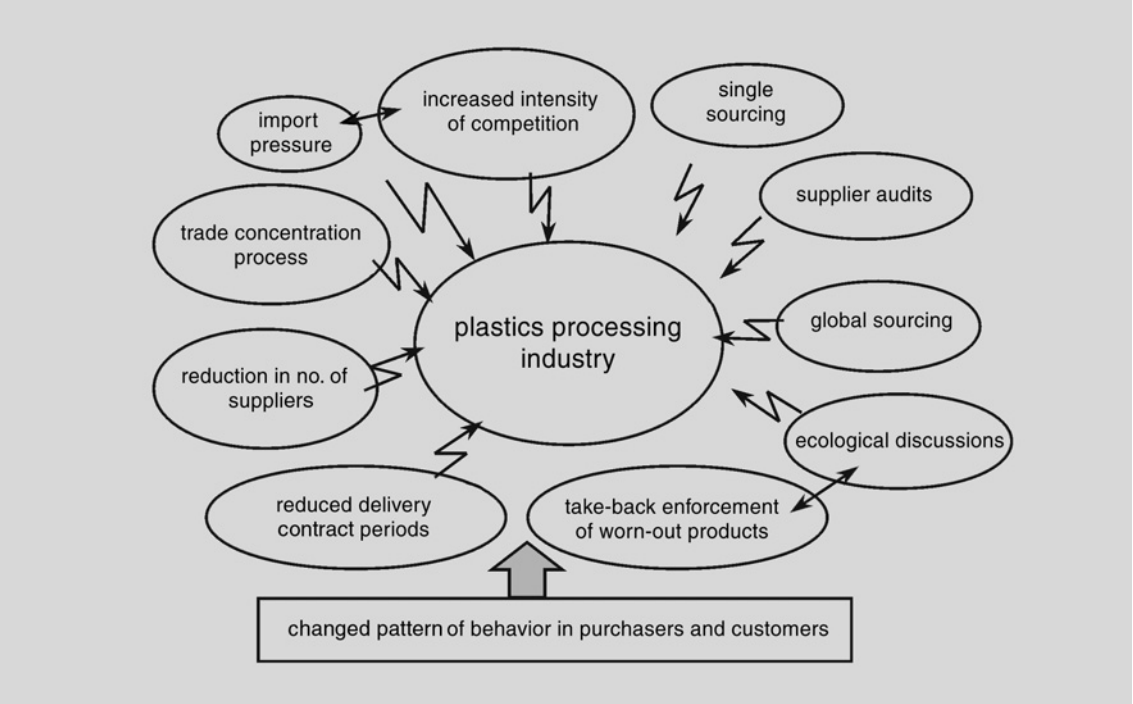

Figure I-3 Specifications demanded of injection molding companies

supplier

An injection molding shop is subject to very particular requirements, when producing car components or systems as supplier to the automotive industry, which sets particularly high quality standards. These not only apply to the products, but also the sub-contracting firm's organization.

just in time
just in sequence

Catchwords in this regard are terms such as "Just in time" and "Just in sequence". Just in time means, that articles produced are no longer buffer-stored, but are delivered at the "right" time to the ultimate manufacturer, on agreed demand. Just in sequence means, that moldings are delivered directly onto the car manufacturer's conveyor belt, in the sequence they are fitted into vehicles. With car seats for instance, this requires that their colors must match those of the interior of the car on the assembly line. This also means however, that the supplier has to deliver a product of the highest quality, because there is no time for correcting any defects: the assembly line would come to a halt, causing an enormous financial loss. Apart from technical processing specifications, the supplier thus must also be capable of dealing with the demands of logistics.

Appendix II

Occupational Safety Around Injection Molding Machines

Key Questions

What are the regulations for the prevention of accidents?
What is the purpose of accident prevention regulations?
What are the essential danger areas on injection molding machines?
What protective measures must be taken with injection molding?

Contents

II.1 European Regulations
II.2 U.S. Regulations

II.1 European Regulations

II.1.1 Accident Prevention Regulations for Injection Molding Machines

protection at work

It is the aim of protection at work, to safeguard the life and health of people against any danger, that may arise while working, or be caused by the actual work itself.

safety at work

Safety at work is that situation, in which the employee is being protected from job-related danger. Safety at work is therefore an important task for the employer, and is the management's responsibility.

accident prevention

So that the status of safety at work can be assured permanently within the company and the production shops in particular, instructions based on statutory law are issued regarding accident prevention. An example is the regulation for preventing people from coming to bodily harm in the workplace.

work place "injection molding machine"

accident prevention regulation

The German Prevention of Accidents Regulation VGB 22 deals with "Operator-attended machines in the chemical industry, as well as the Rubber and Plastics Industry". However, it does not apply to injection molding machines, for which a separate, individual accident prevention regulation has been passed and is known as the Accident Prevention Regulation VGB 7 ac (VGB 7 ac) "Injection Molding Machines", dated October 1956. It is occasionally updated, the current version is of January 1, 1993.

implementation instructions

Implementation instructions are issued as complements to these accident prevention regulations. They instruct firms in achieving the mandatory protective rights, based on the above mentioned accident prevention regulations.

European standard EN 201

machine guideline 98/37/EC

This accident prevention regulation is closely related to the requirements of the European standard for "Injection molding machines" EN 201. There is also a guideline, issued by the European Parliament and the European Council in June 1998, in which the alignment of the judicial- and administrative rules for machines by EU Member States has been determined. This is known as the "EC machine guideline 98/37/EC".

EN-Standard

The EN 201 of safety-related stipulations for injection molding machines has been turned into National Standards. For example, at present, it is applied in Germany in its April 1997 version as DIN EN 201. The list of contents pertaining to this standard for injection molding machines is shown in Figure II-1.

II.1.2 Endangerment and Essential Danger Areas

list of endangerment areas

The list of essential endangerment, as detailed in DIN EN 201, has been divided into these areas:

- The following come within the scope of general endangerment: mechanical danger, danger from electrical energy, danger from heat-sources, danger

0 Introduction
1 Area application
2 Normative referrals
3 Definitions
4 list of general and additional endangerment
5 safety requirements and/or precautions
6 Determining agreement with the safety requirements and/or precautions.
7 User information

Figure II-1 Contents of the European standard for injection molding machines, DIN EN 201

from noise, danger from gases, vapors and the various forms of dust, as well as danger caused by slipping, tripping-up and falling.

- Additional endangerment in individual machine sections consist of the mold area, the area around the clamping mechanism, the area where movement-drives of cores and ejectors operate outside the mold area, as well as outside the area of the clamping mechanism, the area around the nozzle, the area around the plasticating- and/or injection unit, and the area around the discharge opening. (Figure II-2).

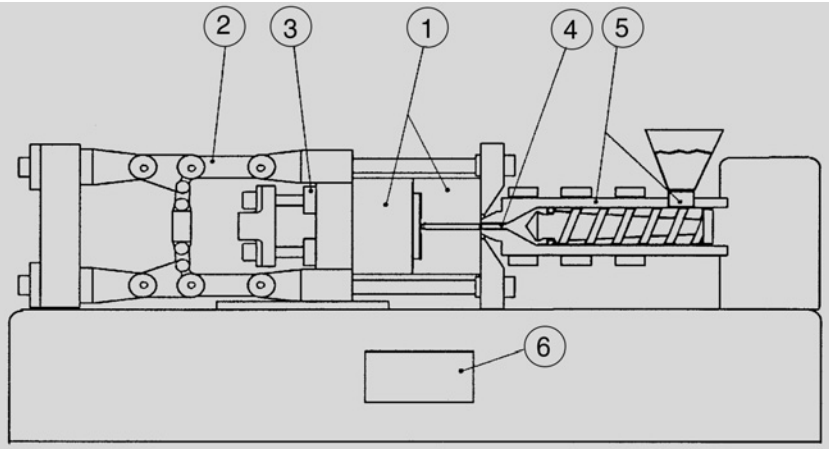

1 Mold area
2 Clamping mechanism area
3 Movement drives area for cores and ejectors
4 Nozzle area
5 Area of plasticating- and/or injection unit
6 Area around the discharge opening

Figure II-2 Essential danger areas on horizontal injection molding machines

Apart from the above, DIN EN 201 also lists additional endangerment, affecting special machinery designs. These, for instance, concern specifically described danger areas on rotary table machines, or on multi-station machines with moving plasticating unit.

The Standard also refers to endangerment arising from the combination of injection molding machines with accessories, such as mold-changing equipment and mold-retaining clamping devices.

II.1.3 Accident Prevention Regulation (APR) for Injection Molding Machines

accident prevention

Accident prevention for injection molding machines DIN EN 201 describes the essential danger areas on injection molding machines, whereas the Accident Prevention Regulation prescribes definite precautions for preventing accidents. Figure II.3 lists excerpts from the (German) Accident Prevention Regulation for Injection Molding Machines (VGB 7 ac).

II.1.4 Implementation Instructions for APR on Injection Molding Machines

The implementation instructions give specific advice to the manufacturer as well as the employer of injection molding machines, on meeting the Accident Prevention Regulations. For instance, the implementation instructions for accident prevention on injection molding machines makes the following comments to § 1a section 1: *this regulation has been met, when the area covered by the closing mold (danger area) has been completely covered-in at front, rear, top and sides*.

§ 1a (1) Precautions must be taken on injection molding machines, that prevent hands from getting hurt by the closing mold.

§ 3 Coupling-clutches or engaging-gear on injection molding machines must be designed or arranged in such a way, that unintentional engagement is impossible.

§ 4 Crushing- or shearing positions, e.g. on the metering unit, on hydraulically moved components and the toggle-lock mechanism, should either be avoided wherever possible, or covered.

§ 5 (1) Juveniles must not be employed on injection molding machines. This does not apply to juveniles over 16, if this is necessary for them, in order to achieve their educational aims and for as long as their safety is assured by professional supervision.

§ 5a The setting of injection molding machines may only proceed, when all protective equipment is effective.

§ 5c The following provisions apply, if danger areas on injection molding machines have to be accessible:

1. the danger area must be clearly visible from the operating position

2. these machines must be equipped with a main switch, which can be secured against unauthorized or unintentional turning ON, and

3. equipment must have been installed, that prevents the mold's closing movement to be initiated, for as long as people are within the danger area.

§ 5d Within the spirit of Para. 710 Section 1 of the (German) National Insurance Regulations, anybody contravenes these regulations, who intentionally or by gross negligence acts against the legal requirements laid down in Para.1, Para. 1a, Para. 3, Para. 4, Para. 5a or Para. 5c.

Figure II-3 Excerpts from the (German) Accident Prevention Regulation VGB 7 ac

II.2 U.S. Regulations

safety requirements

The U.S. has safety requirements for injection molding machines, created by the Society of the Plastics Industry (SPI), Machinery Division. For example:

- ANSI/SPI B151. 1-2002: Horizontal Injection Molding Machines D Safety Requirements for Manufacture, Care, and Use (revision of ANSI B 151.1-1997).
- ANSI/SPI B 151.29: Vertical Clamp Injection Molding Machines (VCIiMM) D Safety Requirements for the Manufacture, Care, and Use.

Information in these documents is subject to change without notice.

certification guide

SPI recently edited the "National Certification in Plastics Study Guide", which extensively covers all safety issues involved in injection molding. Following is a short summary of this Study Guide.

II.2.1 Safety Procedures

safety devices

Detailed information is provided on safety procedures and safety devices for machine operations, including guards, doors, emergency stops, light curtains, safety bars, and hydraulic and compressed air safety.

Plastics processing by injection molding is not dangerous when the equipment is working properly, the appropriate guards and safety devices are in use, and the operator is skilled and watchful. Rule Number One: *Never bypass or modify any piece of equipment.*

feed throat

The feed throat area can be particularly dangerous. Material feeds into the molding machine through an opening (the feed throat) at the top rear of the barrel. There is usually a hopper, bar magnet, or other devices attached to the opening. At the bottom of the feed throat opening is the screw. As it turns, it can catch anything that is in the feed throat (including sticks, tools, and fingers!).

hazards in processing

The operator must be familiar with hazards in the processing stage, including:

- Burns from hot plastics while purging or starting up.
- Burns from hot plastics and gas from the vents on vented barrel machines.
- Sudden explosions of gas and melted plastic out of the nozzle, or steam caused by excessive moisture in the material.
- Burns from unguarded heater bands.
- Electrical shocks from unguarded heater bands.

- Injection of hydraulic oil under the skin from leaks in hoses or pipes.
- Being crushed in the mold as it closes.
- Having the ejector pins driven through hands or fingers.
- Getting caught in the toggle linkage on toggle machines.

Injection molding machines are equipped with guards around the barrel, which protect the operator from burns and electric shocks. Never operate a machine without the guards in place.

gates, locks

There is a system of gates and locks, which is designed to keep the mold from closing whenever the gates are open. The gates are usually sliding doors that allow the operator to reach into the open mold to remove parts. They also keep operators from getting caught in the moving links that open and close the molds.

emergency stop

Injection molding machines, along with robots, conveyors, and other moving equipment, are equipped with emergency stop buttons. Never use the emergency stop button for day-to-day stops. Emergency stops can harm the machine or equipment.

safety bars and pins

Safety bars or pins are mechanical devices designed to prevent the mold from closing, even if the gate safety switches fail or are by-passed. They are able to withstand the force of the closing mechanism. As with safety switches, safety bars or pins must never be tied back or removed.

hydraulic safety

Most molding machines use electric pumps to generate high pressure in a special oil. This hydraulic pressure is used to inject the plastic, to turn the screw, and to open and close the mold. Any leak, especially in the high-pressure hoses and pipes, can be hazardous. In addition, the oil can get hot enough to cause a burn.

conveyors

Conveyors are motor-driven. Stay away from them and never reach under the belt or into the driving mechanism.

dryers, loaders

Dryers and loaders are not usually hazardous, although a dryer can reach temperatures high enough to cause a burn.

blenders

Blenders are often equipped with rotating hooks or screws. Never reach into a blender for any reason, unless the power supply has been locked-out.

In addition to equipment safety, other safety aspects are covered in the certification. For example:

- Hazardous material handling, storage, and disposal.
- Plant safety.
- Lockout/tagout.

- Accident reporting and documentation.
- Emergency procedures.
- Housekeeping procedures.

II.2.2 Safety Regulations and Information

material safety data sheet

By law, a Material Safety Data Sheet (MSDS) must be published by the manufacturers, importers, or distributors for all materials used in a plant. Any potential health, storage, transportation, and/or handling hazards that could be caused by the material or chemical are shown in the MSDS, along with a description of the seriousness of the hazard.

Each MSDS sheet contains information on:

- Chemical product and company identification.
- Composition of and information on ingredients.
- Hazards identification.
- First aid measures.
- Fire fighting measures.
- Accidental release measures.
- Handling and storage.
- Exposure control and personal protection.
- Physical and chemical properties.
- Stability and reactivity.
- Toxicological information.
- Ecological information.
- Disposal information.
- Transportation information.
- Regulatory information.

OSHA regulations

The main purpose of the MSDS is to make employees fully aware of any hazards associated with materials they use or handle, as requested by the Hazard Communication Standard, in compliance with the Occupational Safety and Health Administration's (OSHA) regulations.

There are many laws and regulations, all of which are designed to ensure that the workplace is safe. OSHA operates at both the federal and the state level. It creates and enforces rules that apply to the workplace, including, but not limited to:

- Noise
- Lighting
- Tools
- Protective equipment
- Forklifts
- Aisles and marking of floors
- Clearance around machines
- Work tables and stands
- Ladders
- Signs
- Doors

EPA regulations

The Environmental Protection Agency (EPA) writes and enforces rules that apply to the environment. Spills, disposal of wastes, and emissions of smoke or fumes into the air come under EPA regulations.

"Chapter 5 Safety" in *National Certification in Plastics Study Guide.* Edited by SPI, Hanser Gardner, Cincinnati, 2000.

Appendix III

Selected Literature

Avery, J.	Injection Molding Alternatives. Hanser, Munich, 1998
Avery, J.	Gas-Assist Injection Molding. Hanser, Munich, 2001
Beaumont, J. P., Sherman, R., Nagel, R.	Successful Injection Molding. Hanser, Munich, 2001
Belofski, H.	Plastics: Product Design and Process Engineering. Hanser, Munich, 1995
Berins, M.	Plastics Engineering Handbook of the Society of the Plastics Industry, 5th ed. Kluwer, New York, 1991
Birley, A., Haworth, B., Batchelor, J.	Physics of Plastics: Processing, Properties and Materials. Hanser, Munich and New York, 1992
Brandrup, J., Immergut, E. H. (Eds.)	Polymer Handbook, 4th ed. Wiley-Interscience, New York, 1998
Braun, D.	Simple Methods for Identification of Plastics, 4th ed. Hanser, Munich, 1999
Charrier, J.-M.	Polymeric Materials and Processing: Plastics, Elastomers and Composites. Hanser, Munich and New York, 1990
Domininghaus, H.	Plastics for Engineers: Materials, Properties, Applications. Hanser, Munich and New York, 1993
Ehrenstein, G. W.	Polymeric Materials. Hanser, Munich, 2000
Glenz, W. (Ed.)	A Glossary of Plastics Terminology in Five Languages: English-German-French-Spanish-Italian, 5th ed. Hanser, Munich, 2001
Gordon, J. M.	Total Quality Process Control for Injection Molding. Hanser, Munich, 1992
Gruenwald, G.	Plastics: How Structure Determines Properties. Hanser, Munich and New York, 1993
Holden, G.	Understanding Thermoplastic Elastomers. Hanser, Munich, 2000

Johannaber, F.	Injection Molding Machines: A User's Guide. 3rd Ed. Hanser, Munich and New York, 1994
Jones, R. F.	Guide to Short Fiber Reinforced Plastics. Hanser, Munich, 1998
Lindner, E., Unger, P.	Gastrow: Injection Molds: 108 Proven Designs, 2nd ed. Hanser, Munich and New York, 1993
Macosko, C.	RIM: Fundamentals of Reaction Injection Molding. Hanser, Munich and New York, 1989
Malloy, R. A.	Plastic Part Design for Injection Molding. Hanser, Munich and New York, 1994
Menges, G., Michaeli, W., Mohren, P.	How to Make Injection Molds, 3rd ed. Hanser, Munich 2001
Michaeli, W.	Plastics Processing – An Introduction. Hanser, Munich, 1995
Michaeli, W., Greif, H., Kaufmann, H., Vossebürger, F.-J.	Training in Plastics Technology, 2nd ed. Hanser, Munich and New York, 2000
Osswald, T. A.	Polymer Processing Fundamentals. Hanser, Munich, 1998
Osswald, T. A., Gramann, P.	Injection Molding Handbook. Hanser, Munich, 2001
Osswald, T. A., Menges, G.	Materials Science of Plastics. Hanser, Munich and New York, 1995
Pötsch, G., Michaeli, W.	Injection Molding, An Introduction. Hanser, Munich and New York, 1995
Progelhof, R. C., Throne, J. L.	Polymer Engineering Principles. Hanser, Munich, 1993
Rao, N. S., O'Brien, K. T.	Design Data for Plastics Engineers. Hanser, Munich, 1998
Rauwendaal, C.	SPC in Injection Molding and Extrusion. Hanser, Munich, 2000
Rees, H.	Understanding Injection Molding Technology. Hanser, Munich and New York, 1994
Rees, H.	Understanding Product Design for Injection Molding. Hanser, Munich, 1996
Rees, H.	Understanding Injection Mold Design. Hanser, Munich, 2001
Rees, H.	Mold Engineering, 2nd ed. Hanser, Munich 2001

Rosato, D. V.	Rosato's Plastics Encyclopedia and Dictionary. Hanser, Munich and New York, 1993
Rosato, D. V. and Rosato, D. V. (Eds.)	Injection Molding Handbook, 3rd ed. Kluwer, New York, 2000
Rosato, D. V. and Rosato, D. V. (Eds.)	Blow Molding Handbook. Hanser, Munich and New York, 1989
Saechtling, H.-J. (Ed.)	International Plastics Handbook, 3rd ed. Hanser, Munich and New York, 1995
SPI (Ed.)	National Certification in Plastics Study Guide. Hanser, Munich 2000
Stevenson, J. F.	Innovation in Polymer Processing: Molding. Hanser, Munich, 1996
Stoeckhert, K., Mennig, G. (Eds.)	Mold-Making Handbook: For the Plastics Engineer. Hanser, Munich and New York, 1998
Tres, P. A.	Designing Plastics Parts for Assembly, 4th ed. Hanser, Munich, 2000

Appendix IV

Glossary of Injection Molding Technology

Aggregate status	Plastics are either in a solid or liquid state; they decompose before they turn into gas
Air entrapment	Air unable to escape during the injection molding process and thus trapped by the plastics melt; air entrapments represent weak spots (reduced strength)
Alphanumeric	Describes a set of symbols (e.g., on a computer keyboard), which consist of numerals, the letters of an alphabet, as well as special characters
Amorphous	Without (regular) form, glass-like, non-crystalline, a condition of highest disorder or absence of structure
Anisotropy	Direction-dependent structure (of small particles, for instance), resulting in direction-dependent properties
Automation status	Assesses the extent to which a production station has been converted to fully automatic operation
Axial	Situated in or along an axis
Back-injection technique	Special injection molding process for producing decorated parts
Back pressure	A programmed "packing" pressure acting on the screw, against which it feeds material into the injection chamber during the plasticizing phase
Blanks	Semi-finished products (pipe-, film- and sheet-blanks) which must still be turned into a finished product by (thermo-) forming or fabrication
Catalysis	Acceleration of a chemical reaction by a catalyst (from Greek kataluein = dissolve). A catalyst is a substance which initiates, accelerates or inhibits a reaction without undergoing any change of its own
Cavity	An impression in the mold of the article to be produced by filling with injected material

Cellulose	This is the most commonly occurring carbohydrate. Cotton, jute, flax, and hemp are almost composed of pure cellulose. The individual molecules are macromolecules consisting of glucose units (glucose = grape sugar). Wood consists of approximately 60% cellulose
Chain link	Unit in a macromolecule, occurring in continuous repetition
Chemical bond	The electric forces linking atoms in molecules or non-molecular solid phases. Three basic types are usually distinguished: ionic or electric bonding, covalent bonding and metallic bonding
Clamping force	Force required for the mold's clamping movement
Compression	Compacting, squeezing together
Compression zone	A section of the screw, which compresses the plastics melt (transition zone)
Composite injection molding	Special injection molding process, where at least two materials are molded next to each other (butt-on method) or layered, one above the other
Concave	Curved inward
Concentric	Located in the center, middle
Controls	The control system has the task of coordinating the machine movement sequences. It is usually housed in a 'stand alone' control cabinet alongside the machine
Convex	Curved outward
Cooling time	Period an article spends in the cooled mold after injection, until it is sufficiently stable for demolding
Core pulling	Facility for moving a component (core) in and out of the mold. Employed with undercuts or hollow bodies
Cross-linking	The linking of plastics molecules by primary valencies into a mainly three-dimensional network. Suitable polymers can also be cross-linked chemically, by adding corresponding bridge-building molecules
Crystal	Derived from the Greek 'kristallos', meaning ice or quartz. Crystals consist of periodically arranged building blocks atoms or molecules bound by regular surfaces. They present a state of great orderliness
Crystalline	Made up of numerous tiny, often incompletely formed crystals (crystallites)
Crystallite melting temperature	Temperature (T_m) at which crystalline zones of a partially crystalline thermoplastic melt

Cycle	Refers to a process usually consisting of multiple phases (stages) and capable of being executed repeatedly. (The injection molding cycle, for example)
Decomposition temperature	Temperature (T_d), above which a material is destroyed by chemical decomposition, i.e. the chemical bonds holding the molecule together are destroyed
Degree of automation	Measures the change-over of a molding shop to fully automatic production
Demolding	Article removal from the cavity
Dissipation processes	Processes, by which friction is converted into heat
Distillation	Most important chemical separation method, by which liquid or liquefied substances are separated from other (even solid) substances by evaporation and re-condensation
Dosing	Measuring, metering, feeding in predefined quantities
Dual system	Forms part of the German packaging directive, obliging packaging producers and distributors to set up their own systems for collecting and recycling used transit and post-consumer packaging materials. Operates parallel to communal refuse collection. Full designation: Duales System Deutschland = Dual System Germany
Elastomers	Group of rubber-like polymers with widely spaced cross-links, which cannot be melted or dissolved but can be swelled
Elongation (at maximum force)	This indicates the change in length of a body being pulled in one direction by applying a force. Ultimate elongation occurs at the maximum amount of force applied. It is specified as a percentage of the body's original length
Exothermal reaction	Chemical reaction, during which heat is released
Face (of flight)	The front face of a screw flight, oriented toward the feed hopper. The rear face of a flight, which pushes the molding compound, is oriented towards the screw tip
Feed zone	Hopper-end section of a screw, into which the raw material is drawn and conveyed to the next zone
Finished article	Finished plastics article (e.g. screwed/bolted together, assembled)
Flash	Develops, when plastics melt penetrates the mold's parting plane (mold parting force too high)
Flow temperature	Temperature (T_f), above which very little force is required for molding thermoplastics

Fluidized bed process	Powdered or fine-grained material (e.g., quartz sand) is swirled upward by rising gases at a certain characteristic flow rate to such an extent, that the system resembles a liquid in many respects. When used with the pyrolysis of plastics, this method transfers heat rapidly and the process can also be performed in closed reactors
Functional groups	Groups of atoms, that impart a certain reactivity to molecules and which enable material groups of similar chemical reactivity to be distinguished (e.g., hydroxyl groups of the alcohols, carboxyl groups of the organic acids, amino groups of the amines)
Gas injection technology	(GIT) Special injection molding process. A polymer is injected into the mold first, followed by an inert gas, which is introduced separately
Gate	Term for the cross section of the runner at the point, where it connects to the cavity
Gate area	Term for the cross-sectional area of the runner at the entrance into the cavity
Glass transition temperature	Temperature, (T_g) at which the amorphous regions of thermoplastics soften, when heated
Granulate	Plastics raw material in granular form. Granules shaped cylindrically or like lentils, usually
Green dot	A symbol printed on packs considered recoverable (cf. Dual system under D)
Handling unit	Manipulating robot
Hardener	Second chemical component required for activating the cross-linking reaction of prepolymers in order to obtain thermosets or elastomers
Heating time	Length of time which an elastomer or thermoset article spends in the hot mold after injection, in order to achieve the cross-linking density required for retaining dimensional stability
Heating value	Defined as that volume of heat, which is generated by burning 1 kg of solid or liquid fuel, or 1 cubic meter of gas
Holding pressure	Pushes additional melt into the solidifying molding at the end of the injection process. This keeps shrinkage (loss of volume) to a minimum, as the article cools. It also compresses the material's internal structure
Homogeneity	Similarity, singularity, uniformity
Hydraulic	Operating by the pressure of a liquid (hydro = water, but nowadays oil is the conventional hydraulic medium)

Hydraulic system Referring to that module of the injection molding- or other plastics processing machine, which is responsible for providing power (pressure) and movement from pumps and accumulators through pipe-lines and hoses to valves and cylinders

Injection compression molding Special injection molding process, with injection taking place while the mold is still partially open. By then closing the mold fully at clamping/locking pressure, the melt is compression molded into the respective article

Injection molding cycle This is the accumulated time taken by the injection molding machine processes for producing the article(s) contained in a single shot

Injection pressure Pressure applied by the screw while pushing the plastics melt into the mold during the injection process

Investment Long-term investment of capital for replacing capital assets (e.g. machines), which have been amortized (replacement investment) or to procure new means of production (new investment)

Ion exchangers Inorganic and organic substances, which can exchange their own ions for others without change in stability. They are employed for the softening (desalination) of water

Isotropy Condition, in which the properties of a material are completely independent of direction (isotropic), i.e. identical in all directions

Laminar Term describing a non-turbulent flow, which proceeds in layers

Land Winds around the screw core in the manner of a thread on a bolt

Layered structure Structure and arrangement of the individual layers of a fiber plastic composite (laminate)

Locking force (clamping force) Force required for keeping the mold locked against the mold parting force (product of injection force and projected area) during the initial filling process, but also during the holding pressure phase (or curing phase in the case of thermosets)

Lot size A quantity of similar parts, functional groups, or finished products

Macromolecular materials Consist of threadlike or three-dimensional giant molecules of at least 1000 atoms. These also include a number of natural materials, such as cellulose, proteins, and rubber

Masterbatch A colorant concentrate mixed into a solid (plastics granulate), or even a liquid medium, which is added to the natural granulate either separately or during the production run

Melt Molten molding compound

Melting temperature range	The temperature range, within which a solid material changes to a liquid
Metering zone	This is the final zone of the screw, which is designed to further homogenize the material and ensure, that it has a uniform temperature. This zone imparts the pressure which is necessary for the melt to overcome subsequent resistance. The metering zone determines the output rate
Modulus of elasticity (E-modulus)	The ratio of stress to deformation within the elastic range of a material. It can be determined by tensile test, compression test, and bending test. Because of the viscoelastic characteristics of polymers, time-dependence is an important consideration
Mold cavity	The hollow part of the mold consisting of the shape of the article to be molded
Molding	An article produced by molding or reshaping. Can often be used without requiring finishing
Molding compound	An unformed or preformed material, which can be processed by forming (shaping) into molding materials, part of moldings or blanks within a certain temperature range
Molecule	Consists of atoms connected by chemical bonds; the smallest unit of a chemical compound
Molecular weight distribution	A plastic's macromolecules differ in length. Molecular weight indicates the frequency, at which a macromolecule of a certain length (or a certain weight) is distributed
Monomer	Derived from Greek for 'single part'. It is the basic unit, of which macromolecules are composed. Thus ethylene is the monomer of polyethylene, for instance
Multicomponent	Special injection molding procedure, during which at least two or more materials are processed by injection molding
Multifunctional	Indicates, that multiple functions are combined within a single component. For example: a ceiling lamp is suspended by a cable (mechanical function), which also conducts the electricity to the light. The cable thus carries out two different functions
Orthotropy	Also known as orthogonal or rhombic anisotropy, it indicates, that properties depend on direction. The properties are symmetrical in relation to a system of three perpendicular (orthogonal) planes
Parting plane	The plane, in which the injection molding tool separates, when it is opened; complex molds must often be provided with additional parting planes

Petrochemistry Collective term used in the chemical industry for large-scale syntheses, which are based on crude oil as raw material

Plasticating Describes the conversion of a rigid plastic material to a thermoplastic condition by the introduction of heat. This can be generated by internal friction, or applied externally

Plasticizers Plasticizers are employed as 'softeners' in plastics. In a physical sense, 'softening' means moving the glass transition temperature (T_g) in highly polymeric materials towards lower values, generally to a point below room temperature. Thus a rigid, brittle material becomes extensible, rubber-elastic (at room temperature)

Polarity (of plastics) Generation of electrical charge distributions within molecules results in polarities of varying intensity

Polyaddition Chemical reaction, during which reactive groups of monomers turn each other into polymers through the migration of atoms or groups of atoms

Polycondensation Chemical reaction for producing polymers by separation of a by-product (e.g. water, CO_2)

Polymerization A chemical reaction in which polymers are formed from monomers by dissolving the double bonds (C=C)

Polymers Long molecular chains or chain molecules are formed from monomers. These are found within the chain as recurring units (Greek "poly" = many, "meros" = parts)

Polyolefins A group of plastics, composed of the elements C or H only. These include polyethylene (PE) and polypropylene (PP) for instance, which are amongst the most popular standard plastics employed

Process computer The task of open- or closed-loop controlling process parameters is now largely assigned to computers. A process computer can be freely programmed. Aided by a program, as well as its built-in measurement and output units, this type of computer is capable of making independent decisions, regarding the open- and closed-loop control processes

Process engineering technicians Term for a group of industrial technicians, known as Process Engineering Technicians for Plastics and Rubber Technology. (German status specification)

Pyrolysis This is the thermal decomposition (breaking-up) of chemical bonds

Quasi-isotropic Almost identical properties in all directions. With fiber reinforced composites, this can be achieved through at least three differently oriented layers of identically thick reinforcing material

Raw material	Naturally occurring basic material, such as coal, ore, hide, cotton, but also water and air. Employed with and for hand-made or industrially produced articles. As part of the manufacturing cycle, an intermediate (semi-finished) article is produced, from which the ultimate part (product) is then fashioned
Recycling	Reutilization of raw materials from waste. For the recycling of plastics, reutilization of sprues and runners from injection-molded products will serve as an example. This waste is recycled by grinding into chips, which are then returned to the injection molding process
Refining	Cleaning and enhancing of natural substances and technical products in a refinery (sugar, crude oil and similar)
Removal (from mold)	Extracting the molded article from the mold (cf. demolding under D)
Resin	A pure, unformed polymer (without additives), also identical with thermoset matrix
Resin injection	By this process, resin moldings are produced in a closed mold. Reinforcing material is inserted into the process mold cavities first, the mold is then closed and (catalyzed) resin is injected
Resistance heating	An electric current flowing through resistance wires induces heat in them. This method is employed in the cylinder's plasticizing zones, for instance
Runner	Channel conducting the injected, pressurized melt to the cavity gate
Sandwich injection molding	Special method, by which at least two materials are injected by the skin-core molding process. The outer skin – injected first – consists of the more expensive material, whereas the core may even be of regrind. It is injected to fill the skin, hence 'sandwich' molding. A cost-saving process
Scatter range	Random spread range, a range projected from several samples of a characteristic, within which all further readings will in all probability be found
Sealing point	The moment, at which the material in the sprue channel has become solid enough to prevent any further flow
Screw plasticating	The screw homogenizes the molding compound, i.e. all its constituents are thoroughly and uniformly mixed with each other, and the molding compound is brought to an even temperature, before injection starts
Secondary valency forces	Intermolecular forces (e.g. hydrogen bonds) with a severely limited range, which amounts to only a few nanometers (i.e., a few millionths of a millimeter)

Self-extinguishing — Ability of a burning (plastics) material to extinguish itself, once the external heat source has been removed

Semi-finished product — See 'Blank'

Shear — Molding compound particles are moved at different speeds during the plasticating and injection process. In other words, individual particles rub against one another. This process is known as shear

Shear heat — Results from conversion of mechanical energy into heat. It occurs within the plasticating cylinder, by friction between granules, against the screw and cylinder wall, during size reduction and crushing of the granules, and finally by the internal friction within the melt during plasticating and injection

Shot volume — Volume of molding compound, which is intermittently injected into the mold by the injection ram or reciprocating screw

Shrinkage — Reduction in volume (volume contraction); values typically lie between 0.2% and 2%, subject to plastics grades processed

Sprue bush — That part of the injection molding tool, against which the nozzle pushes during the injection process to inject the melt. The bore of the sprue bush is cone-shaped and with many single impression molds connects directly into the cavity

Stabilizers — Chemical additives, which make a plastic more resistant to certain influences (e.g., UV radiation, heat, oxidation, weathering)

Standard deviation — Measure of the extent to which the individual values of a sample (e.g., a series of measurements) deviate from the mean value

Statistics — Scientific methods for numerically determining changes in quantities and factors, as well as calculating probabilities

Structural foam molding — Special injection molding process for the production of moldings possessing a cellular internal structure and a smooth external surface

Synthesis — Formation of new substances by the construction of chemical compounds from the basic elements or basic chemicals of simpler structure (derived from the Greek word for 'put together')

Terminal — Term used to describe any input/output device, which is used to communicate with a computer from a remote site (monitor, keyboard, printer). More recent injection molding machines are equipped with a display screen and keyboard. The injection molding machine is operated and monitored via these devices

Thermoplastics	This term refers to a group of fusible, soluble plastics which are not cross-linked. They are divided into amorphous and partially crystalline thermoplastics. The latter display both crystalline and amorphous zones
Thermosets	A group of infusible and insoluble plastics comprising polymers, in which the molecule chains are connected in three dimensions by covalent bonds
Toggle lever	Knee-shaped, jointed unit employed for mold clamping
Unidirectional	Aligned in one direction
Viscoelastic	Describes the condition of a body which is both elastic (Hookeian bodies) and viscous (Newtonian bodies)
Viscosity	Measure of a liquid's flow resistance: the higher the viscosity, the higher the flow resistance
Vulcanization	A chemical cross-linking process which provides rubber with its elasticity and resistance to distortion
Wall adherence	If a fluid runs along a wall, the flow rate of the particles touching the wall is zero, because they adhere to it
Weldline	Results, when two melt flow-fronts meet during molding. This weld-line (also known as flow-line) has the potential of being a weak spot (reduction of strength) in the molding

Answers to Review Questions

Lesson 1

1 elastomers
2 fusible
3 transparent
4 amorphous
5 elastomers
6 densely cross-linked
7 stronger
8 PA
9 lower
10 flow properties
11 increases
12 primary processing
13 thermoplastic

Lesson 2

1 clamping unit
2 effective area in the clamping direction
3 113 cm^2, 17.5 in^2
4 1000 kN, 100 t
5 projected area
6 2000 bar, 29,000 psi
7 side by side
8 gas injection
9 back-injection technology

Lesson 3

1 injection
2 a granulate
3 uniformly
4 internal friction
5 metering zone
6 shutoff nozzles
7 non-return valves

Lesson 4

1 cavity
2 conical
3 film gate
4 hotrunner
5 shrinkage
6 1–2%
7 warpage

8 lower
9 heated
10 removed
11 oil
12 parting plane
13 ejector pins
14 diaphragm gate

Lesson 5

1 hydraulic
2 toggle lever clamping unit
3 low
4 hydraulic ram
5 area
6 I = small, II = large
7 4900 kN, 550 t

Lesson 6

1 hydraulic
2 hydraulic motors
3 pump
4 valves
5 microcomputer
6 I = pressure valve, II = check valve

Lesson 7

1 removal
2 open
3 nozzle
4 holding pressure
5 sealing point
6 lower
7 small
8 ^{2} [squared]
9 must not
10 cooling
11 by a handling device

Lesson 8

1 creation of manufacturing documents
2 cooling
3 'absorbing forces'
4 filling characteristics
5 decreases
6 quickly
7 linear

Lesson 9

1 higher
2 staff office
3 product quality
4 earlier
5 optical
6 quality planning
7 mean value ($\bar{x}$)

8 50
9 produce

Lesson 10

1 energy and raw materials
2 shorter
3 unmixed
4 possible
5 bottle crate
6 PE
7 even high
8 easier
9 valuable
10 reused